Panther G

德国“黑豹”G型20mm防空坦克

20mm Flakvierling auf Fahrgestell

VESPID MODELS

1/72 SCALE

Item No.VS720012

Hobbyan.ua

Meaning of icons

FILL HOLE 填平孔洞	OPEN HOLE 钻出孔洞	OPTIONAL 可选择使用	2 SETS NEEDED 同样的制作二组	REMOVE 切除	HEAT THE IRON 加热烫平
BE CAREFUL 小心注意	APPLY DECAL 贴上水贴	REM… 卸…	DO NOT CEMENT 不用粘接	INSTANT GLUE 速干胶 瞬間接着剤	

CAUTION:

1.When you use glue or paint.do not use near a open flame.and sue in a well-ventilated room.
2.Cut the parts off properly and throw waste parts into dustbox at once.
3.Keep all parts out of small children.Children must not to be allowed to put any parts in their mouths,or pull plastic bags over their head.
4.Do not play with the parts for any other purpose, as some parts may be to sharp. More caution and care needed for families with infants.

注意:

1. 當組裝模型時應遠離火種及在空氣流通的房間內進行。
2. 廢置膠料應掉棄在環保回收的垃圾箱內。
3. 由於模型套件有許多細小零件，請勿讓小孩接觸以免產生誤吞之危險。也別讓小孩把包裝膠件之透明塑料袋套在頭上，這很容易引致窒息。
4. 由於零件有不少尖角部份， 請勿把玩及作其他用途，請注意及小心保護你的家人。

CORRECT METHOD FOR APPLYING DECALS:

1. Clean model surface with wet cloth.
2. Cut out of decal sheet and dip them in cold water for 15 seconds.
3. Place decal on proper position on model.
4. Slide off base paper leaving decals on model with wet finger tip.
5. Adjust decals to exact position,push out excess water under decal with soft cotton cloth.

正確貼上水貼紙的方法:

1.將模型表面擦幹净。
2.將貼紙剪下泡入清水中約15秒。
3.將泡濕之貼紙取出置放欲貼處旁。
4.用指尖輕推貼紙表面使其滑出底紙。
5.將貼紙調整至適當位置并輕擦拭水份。

A×2

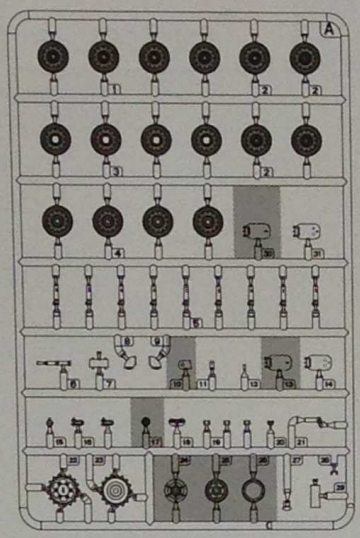

B×2

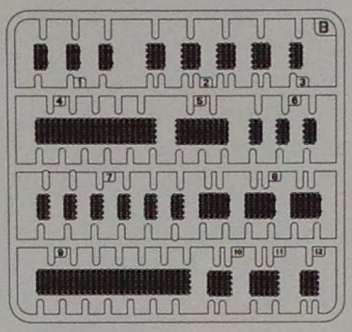

Turret x1

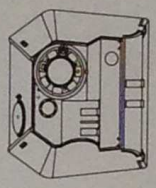

Lower hull x1

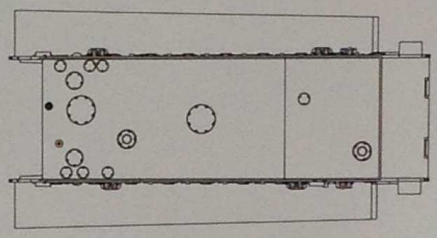

E x1

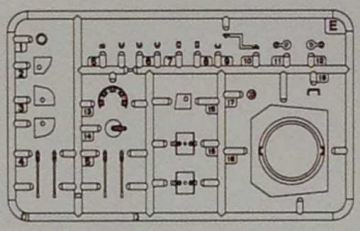

C×1

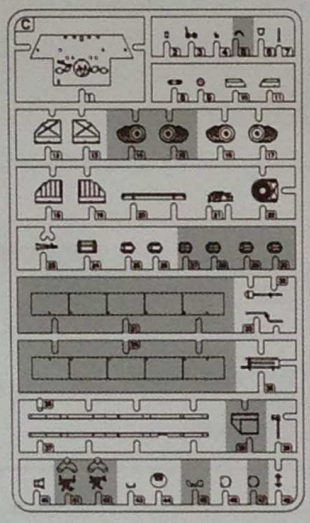

Metal barrel
金屬炮管 x4

Upper hull 1 x1

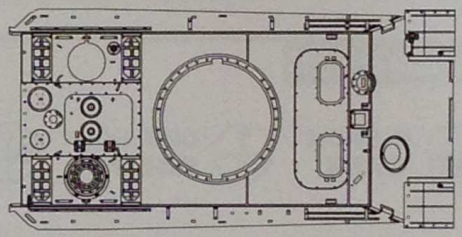

H×2

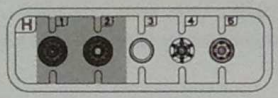

Decal x1

Pa x1

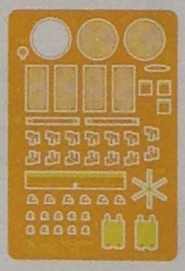

Not for use part(不使用的部件)

Colour	MR.Hobby	Hobby Color	Humbrol	Tamiya
A Dark Yellow	H-79	C-39	84	XF-60
B Red Brown	H-47	C-41	62	XF-64
C Dark Green	/	C-70	88	XF-89
D Steel	H-18	C-28	53	X-10

Hobby.dn.ua

1

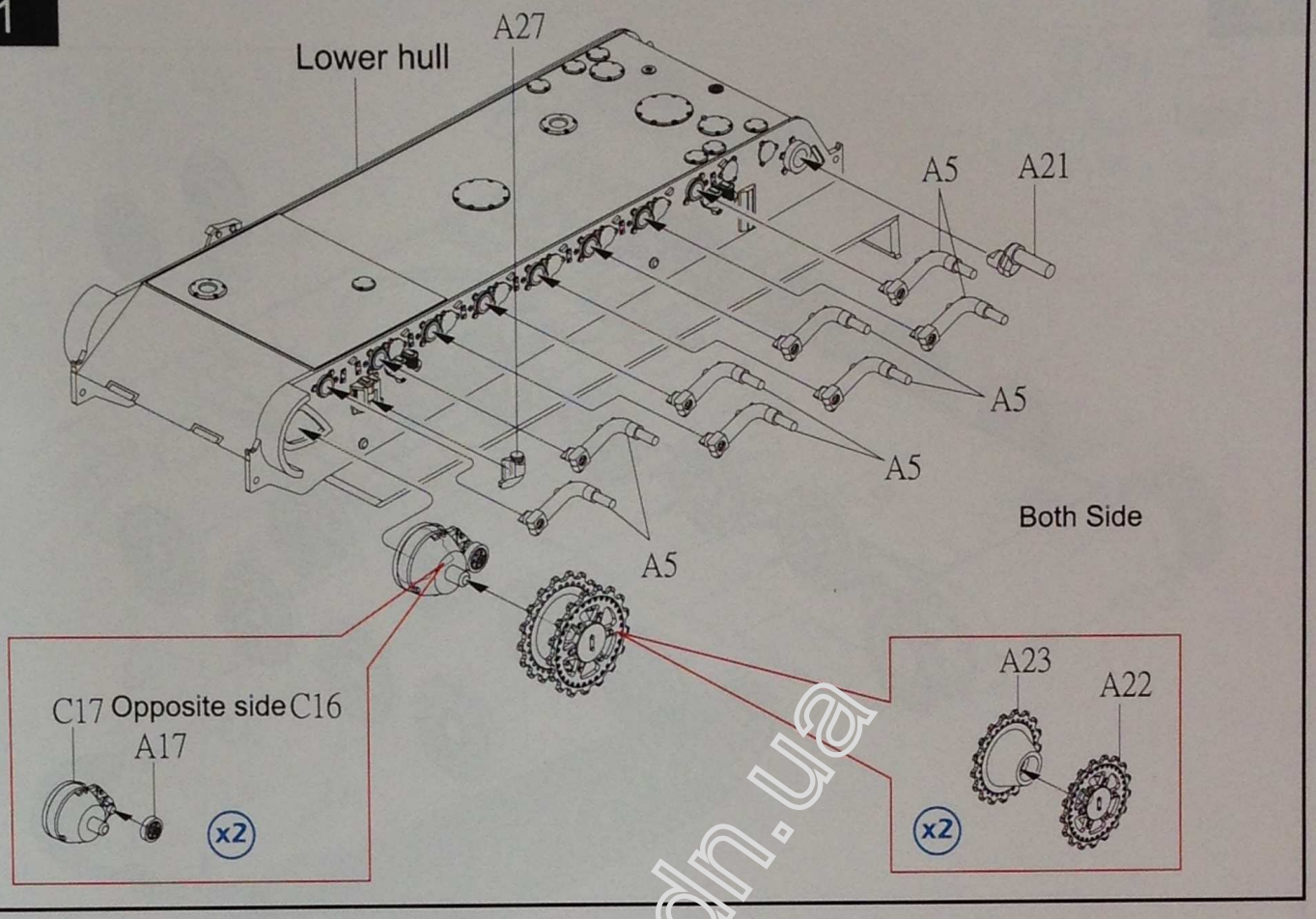

2

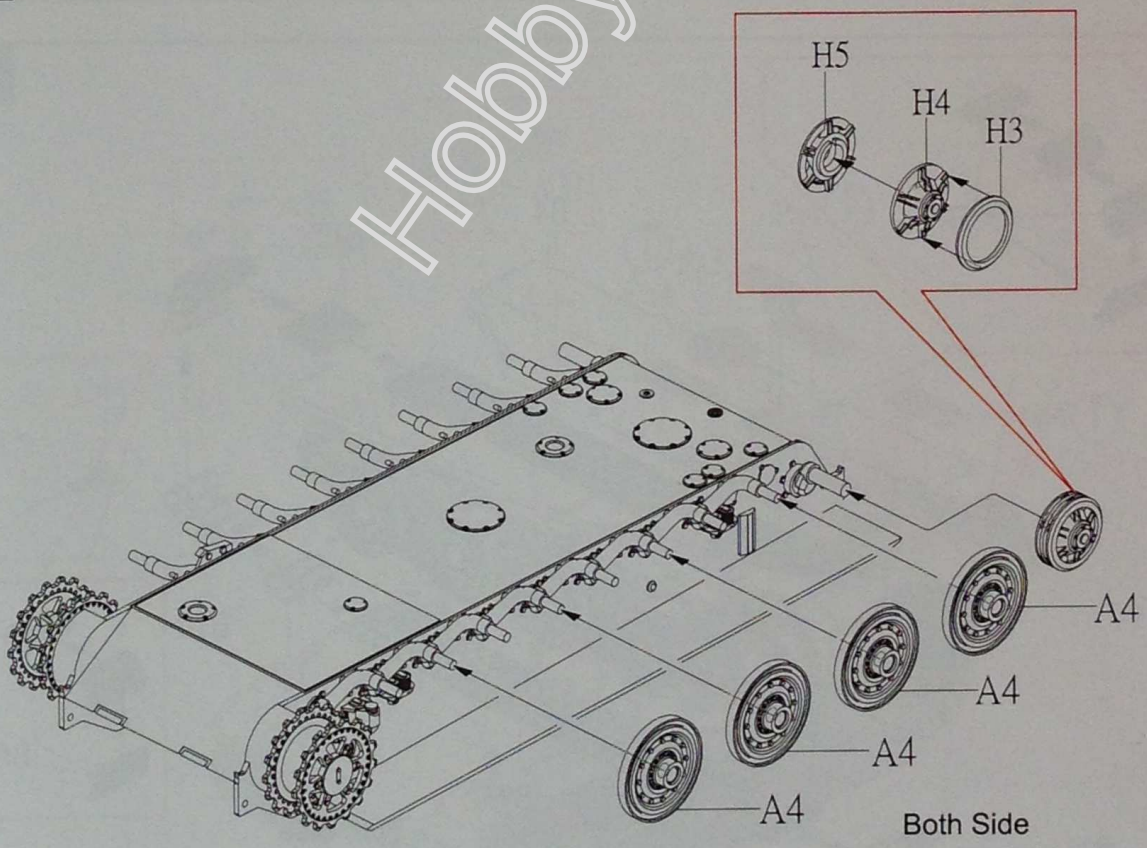

Hobby.dn.ua

3

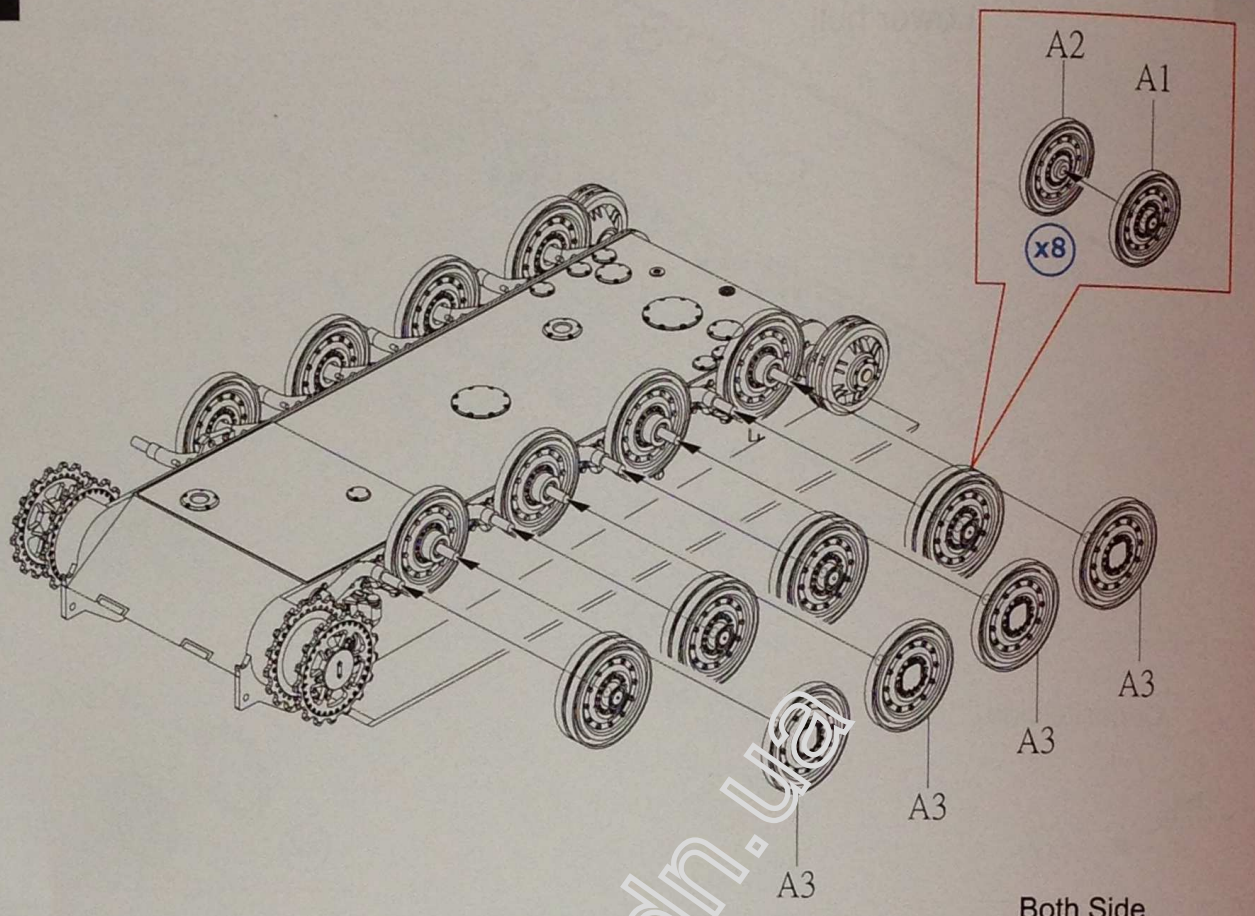

4

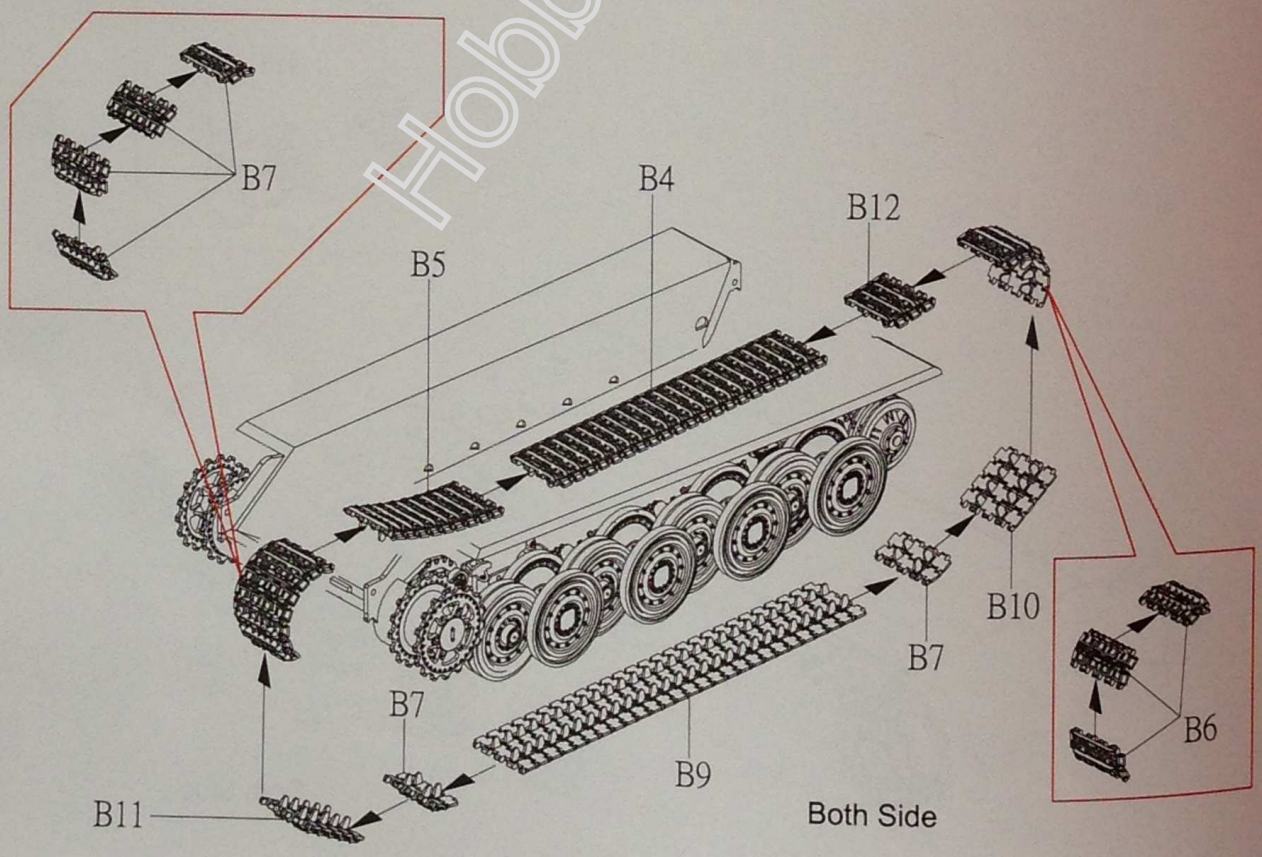

Hobby.dn.ua

5

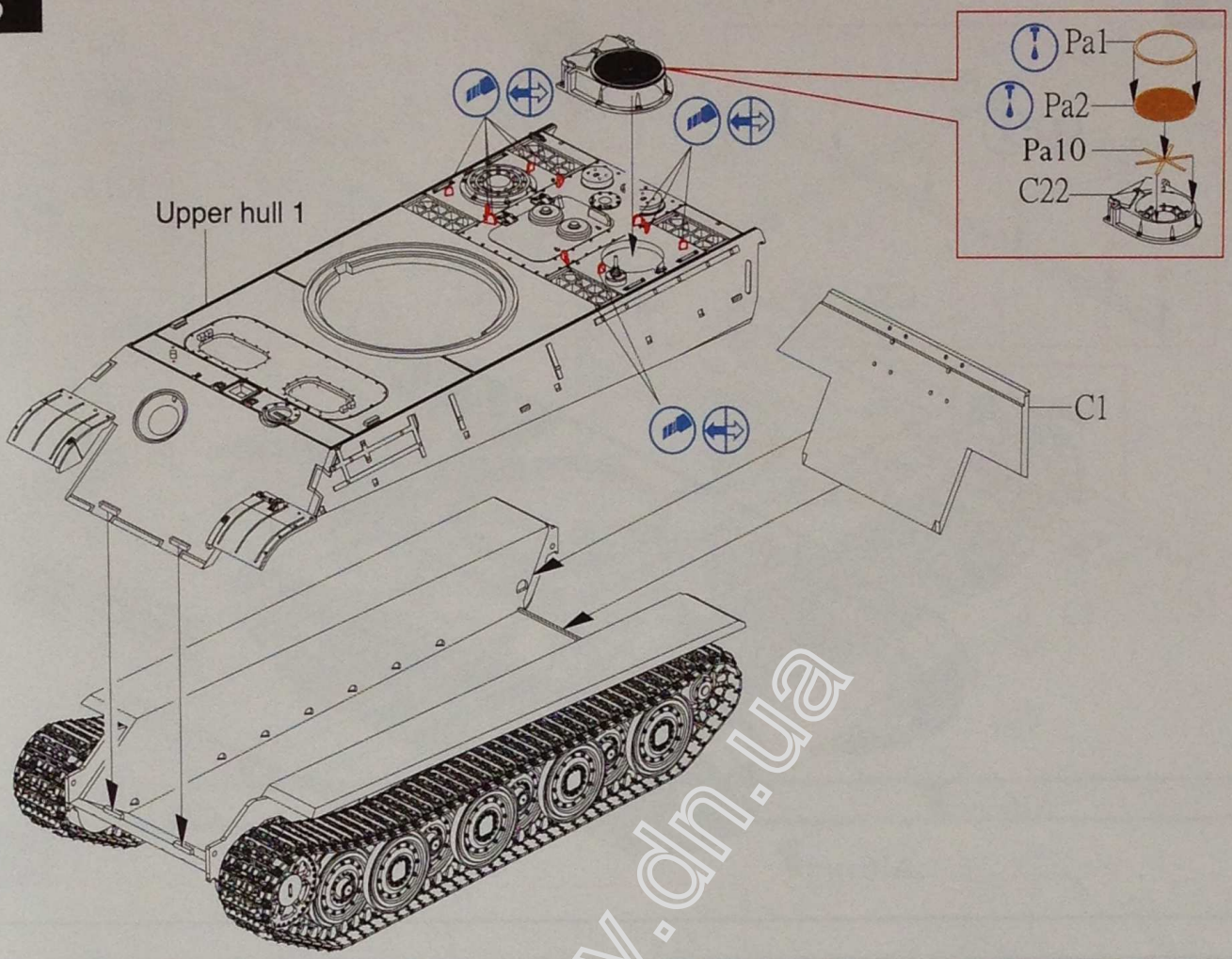

6

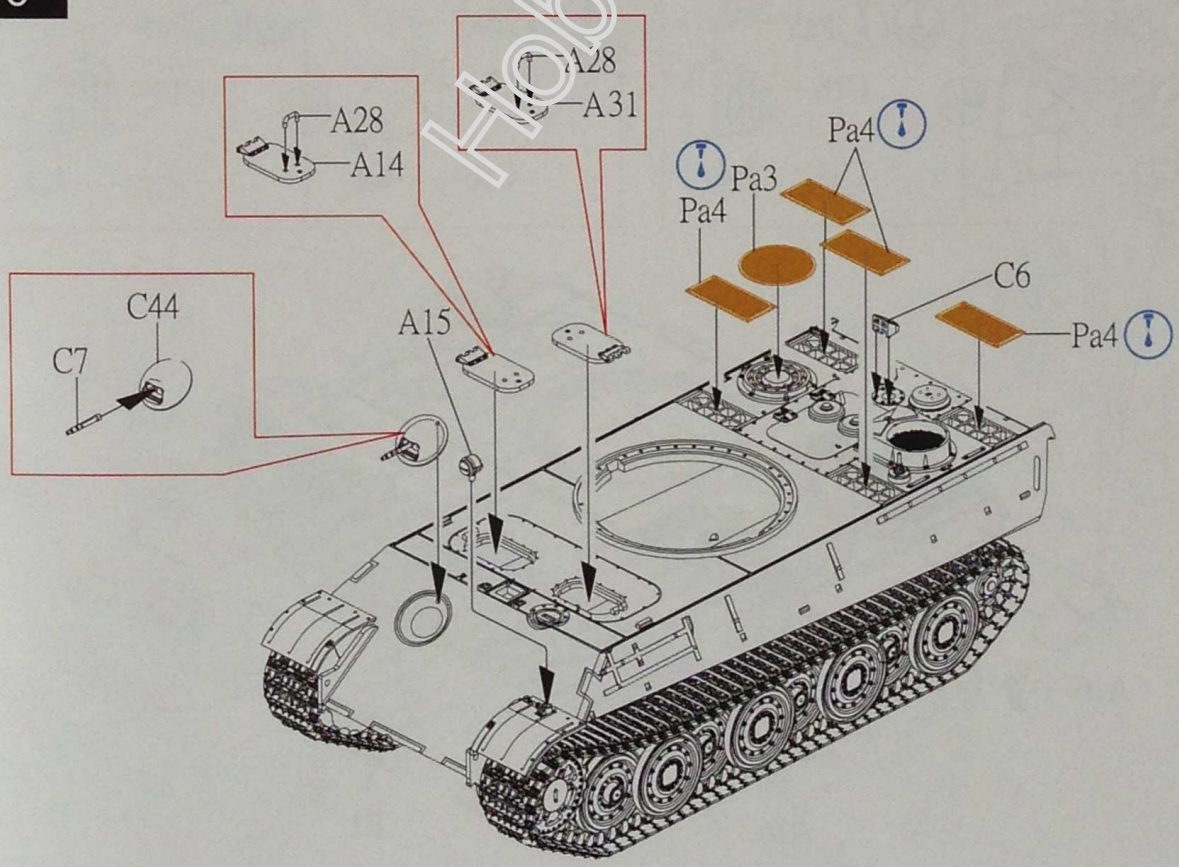

Hobby.dn.ua

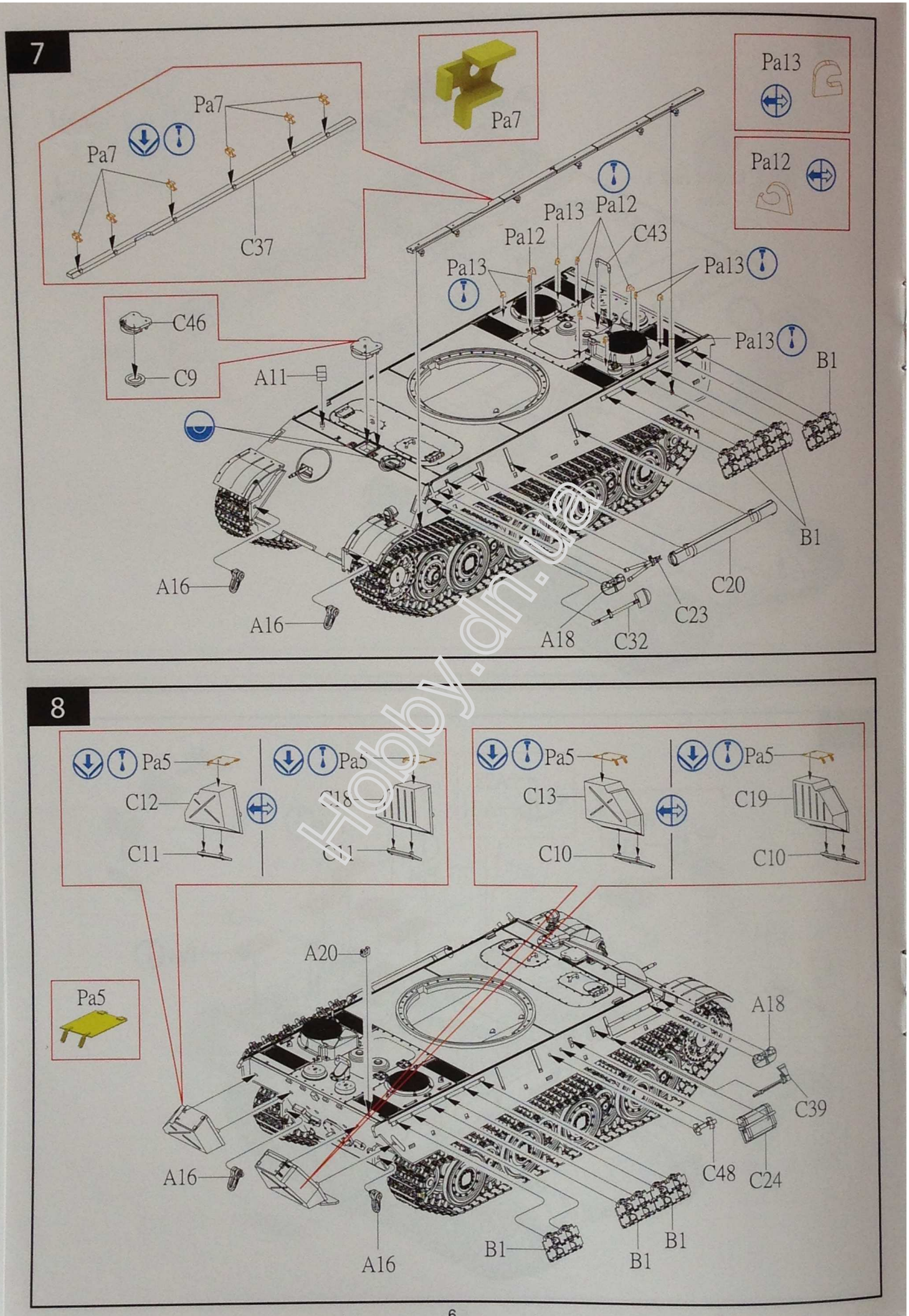
7
Pa7
Pa7
Pa7
C37
Pa7
Pa13
Pa12
Pa13
Pa12
C43
Pa13
Pa13
Pa12
C46
C9
A11
Pa13
B1
B1
A16
A16
C20
C23
A18
C32
8
Pa5
C12
C11
Pa5
C18
C11
Pa5
C13
C10
Pa5
C19
C10
Pa5
A20
A18
C39
A16
C48
C24
B1
B1
B1
A16
Hobby.dn.ua

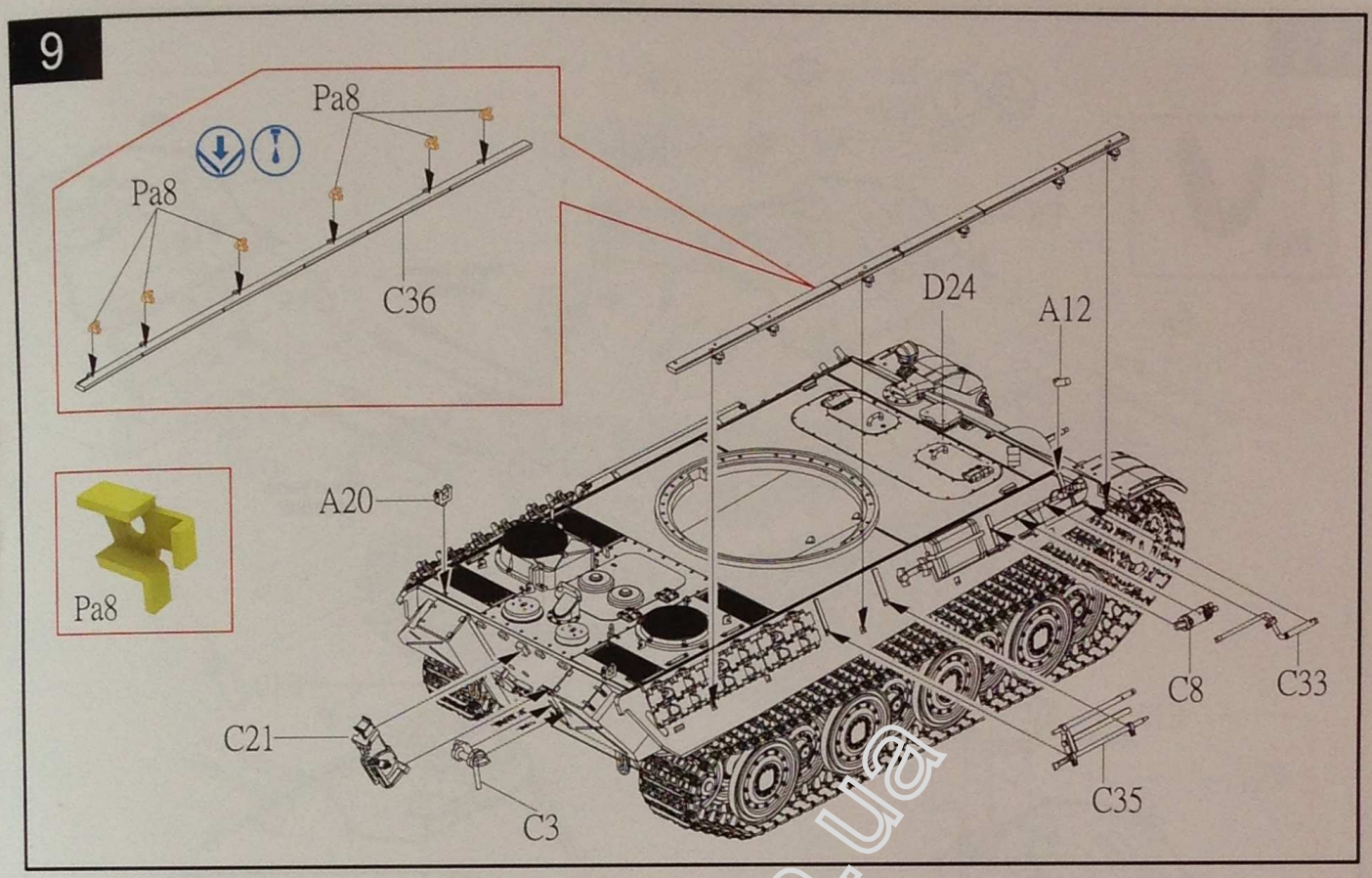
9
Pa8
Pa8
C36
D24
A12
A20
Pa8
C8
C33
C21
C3
C35

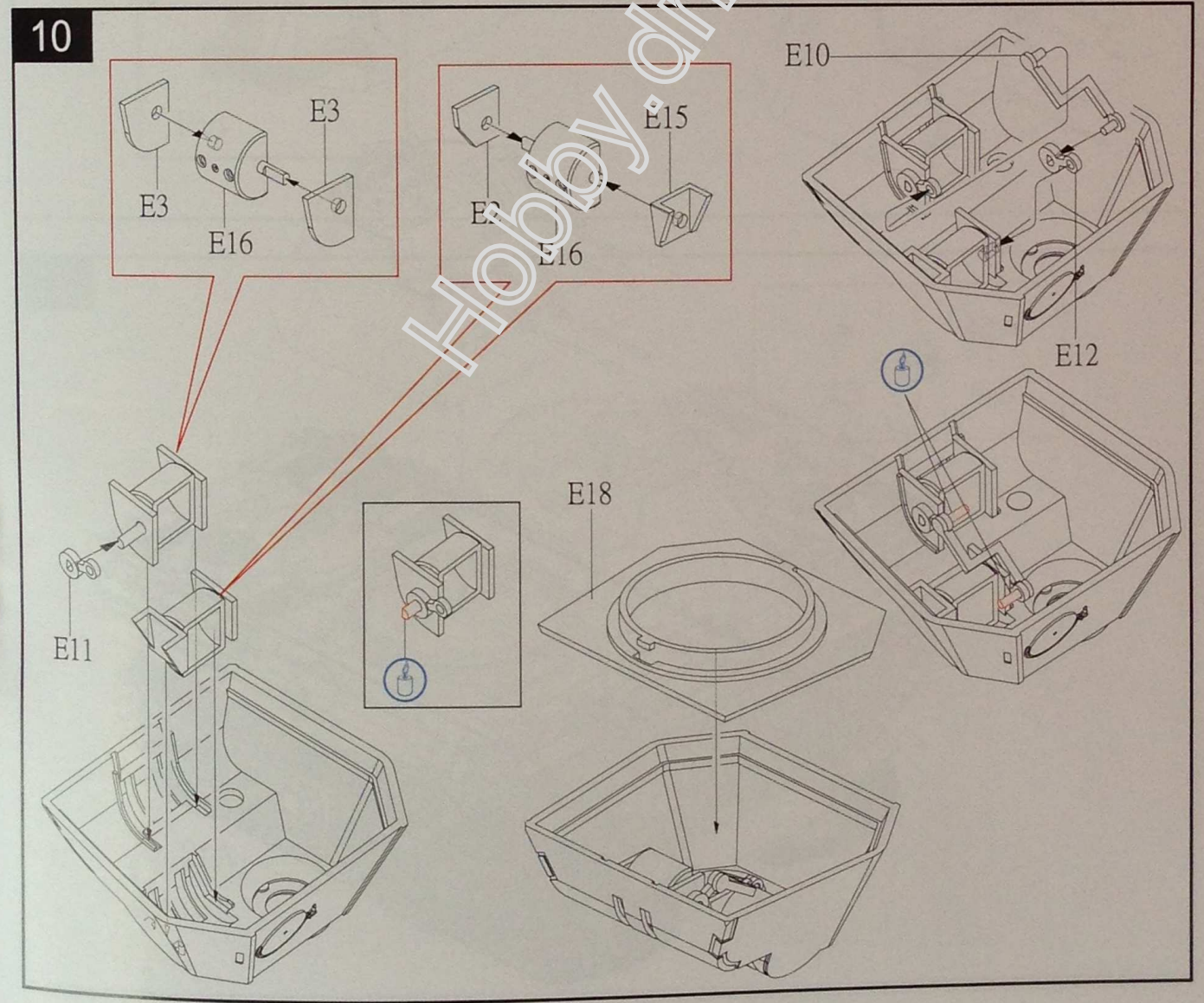
10
E3
E3
E16
E15
E16
E10
E12
E11
E18

Hobby.dn.ua

11

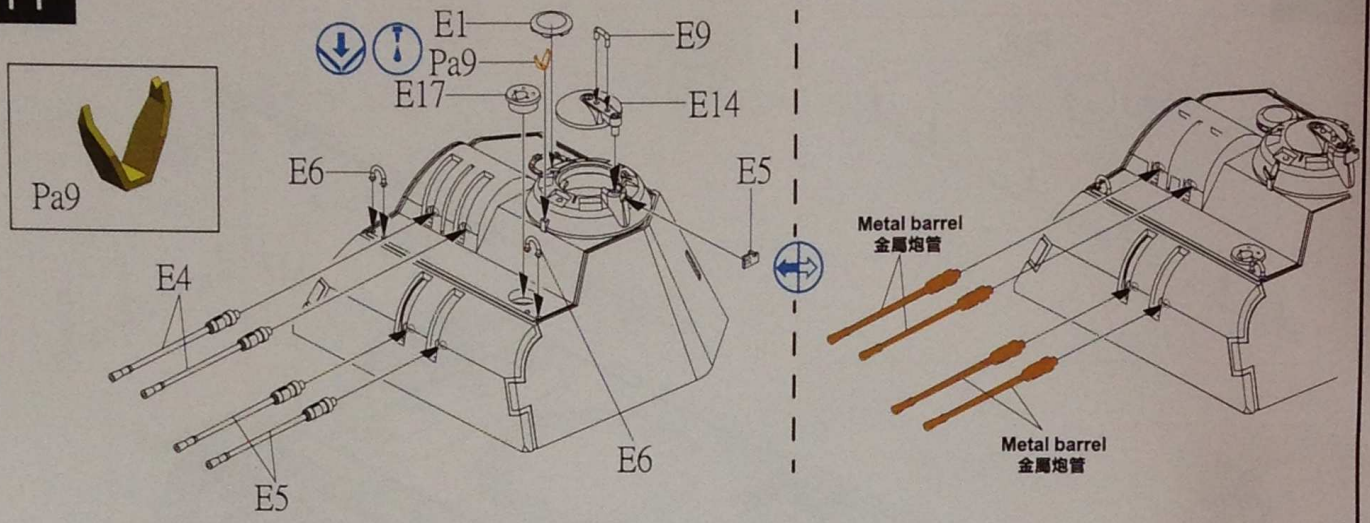

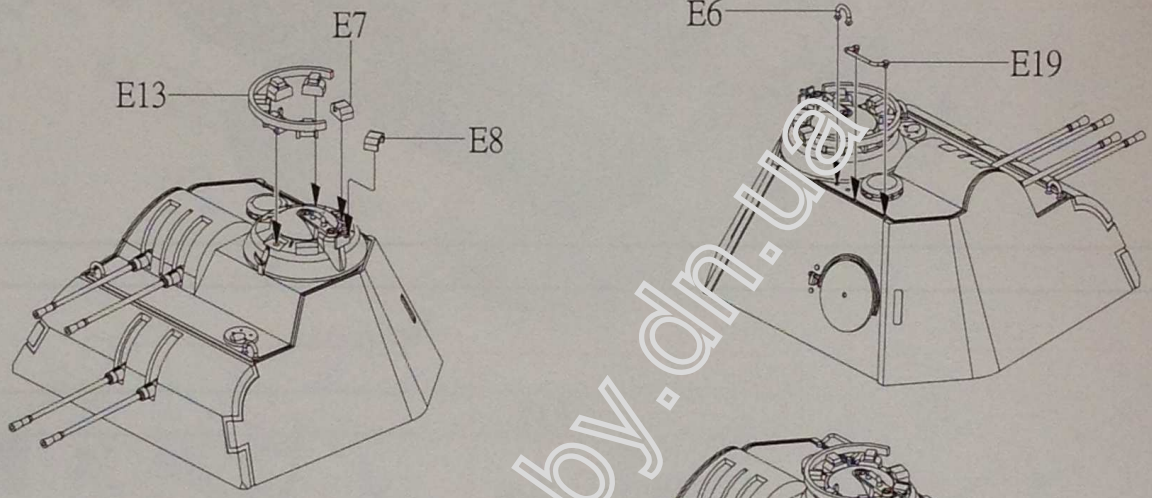

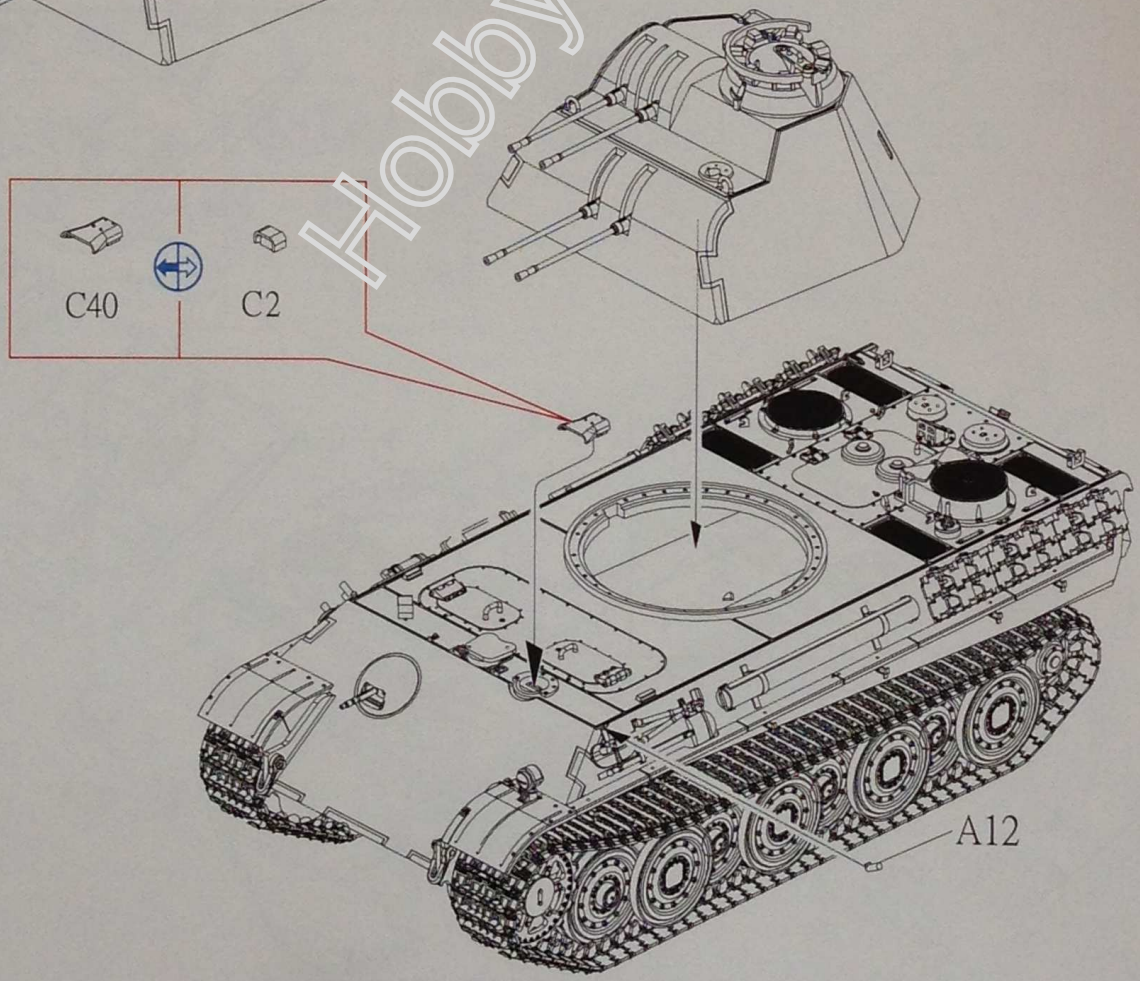

Hobby.dn.ua

12

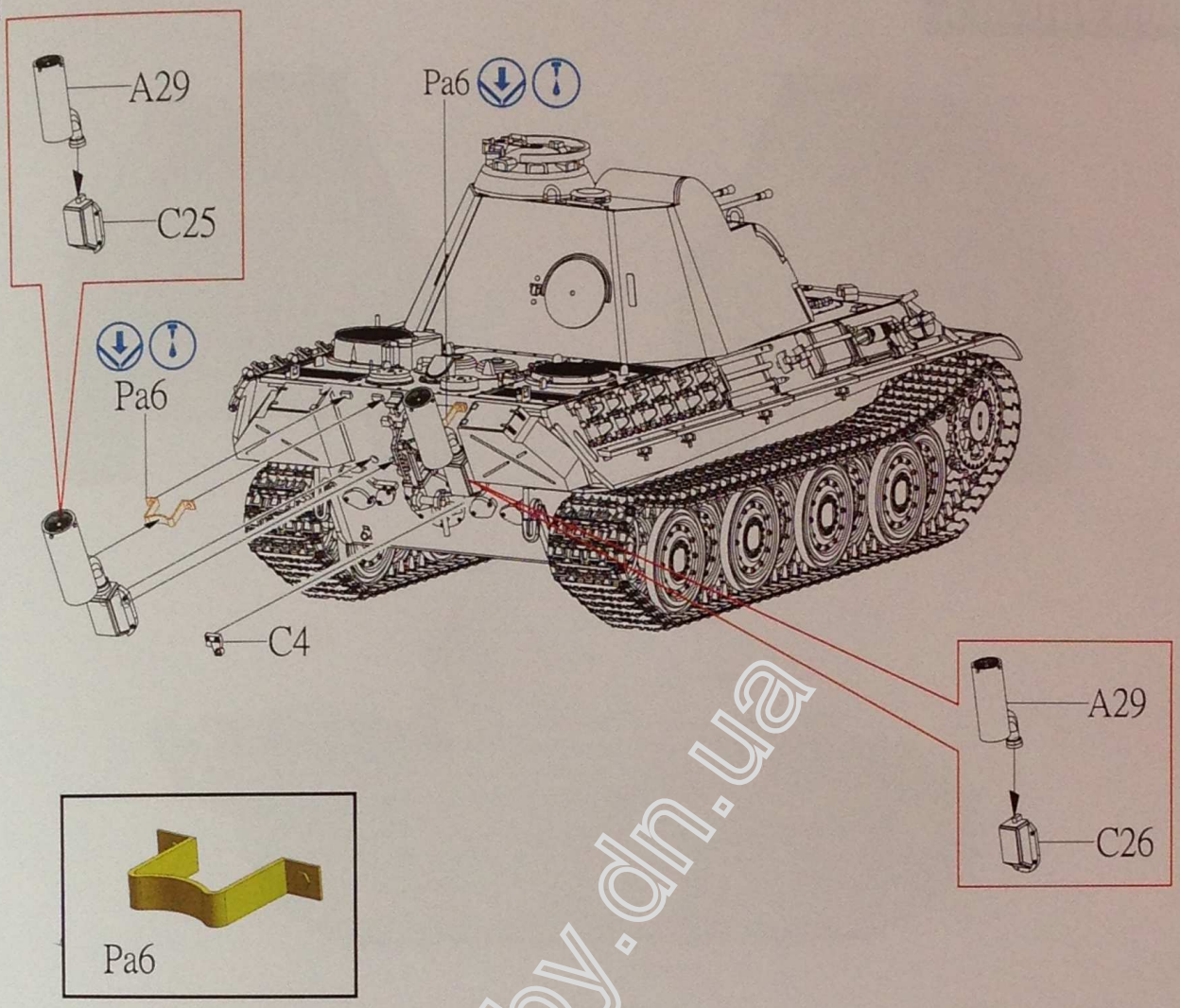

Hobby.dn.ua

13

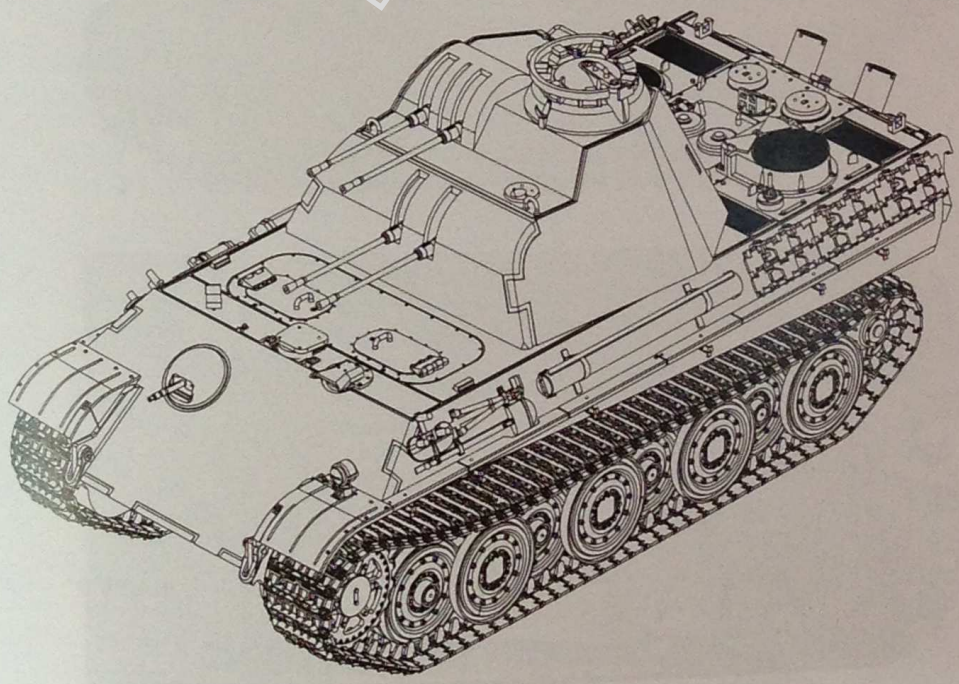

Paint Option 1:

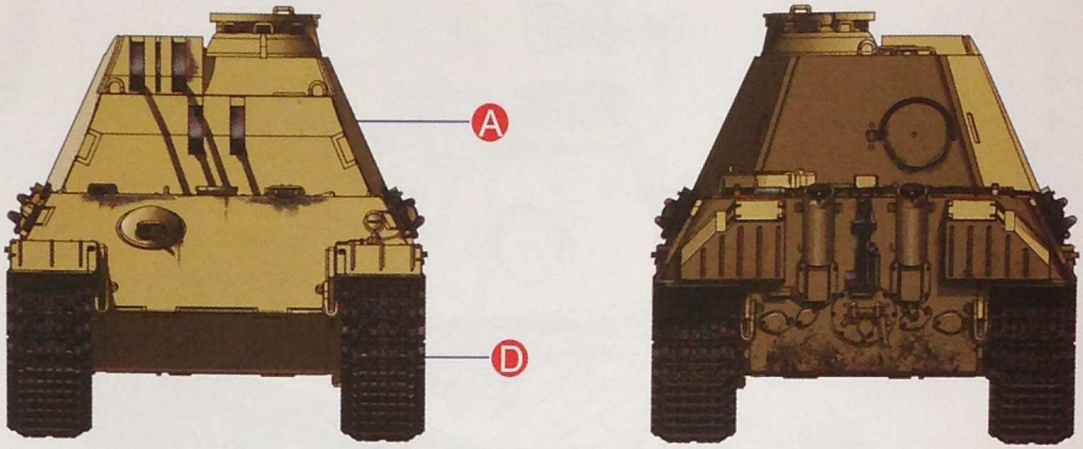

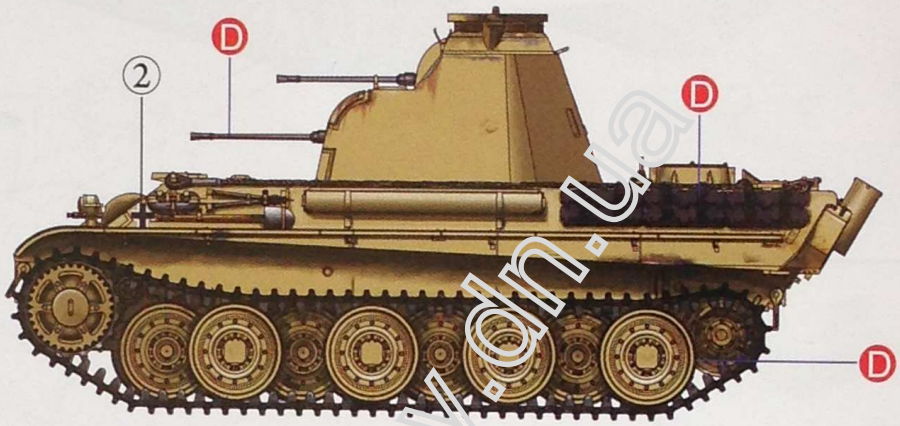

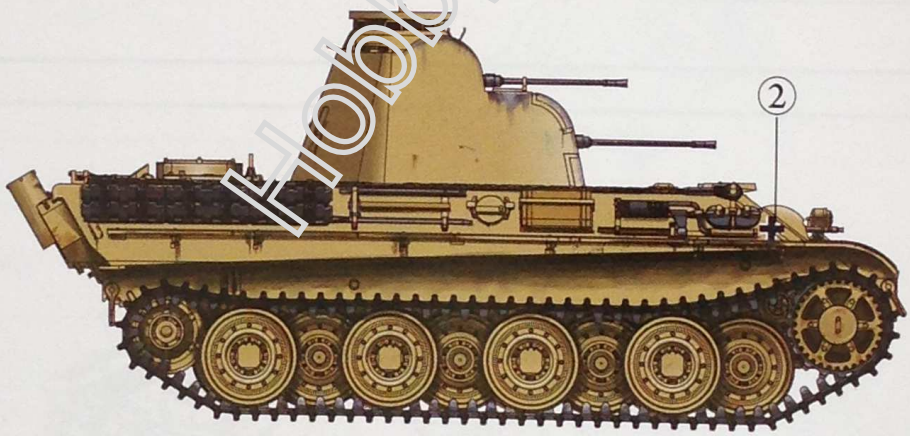

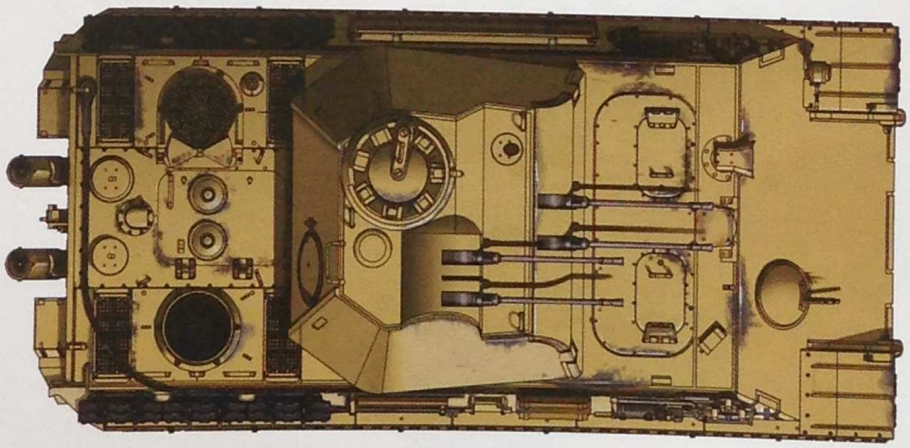

Hobby.dn.ua

Paint Option 2:

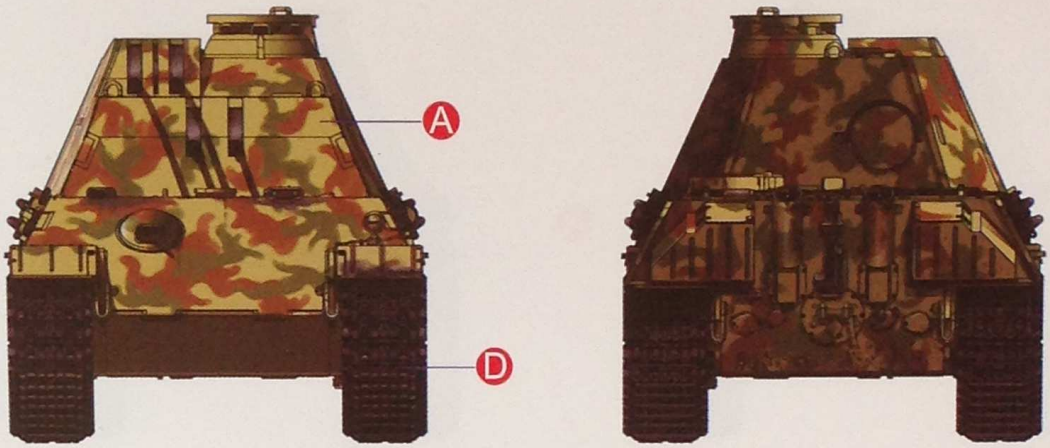

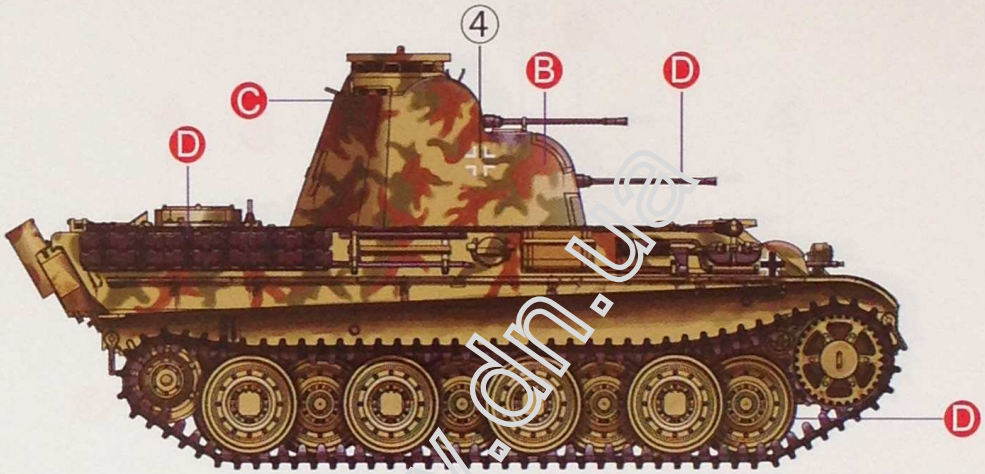

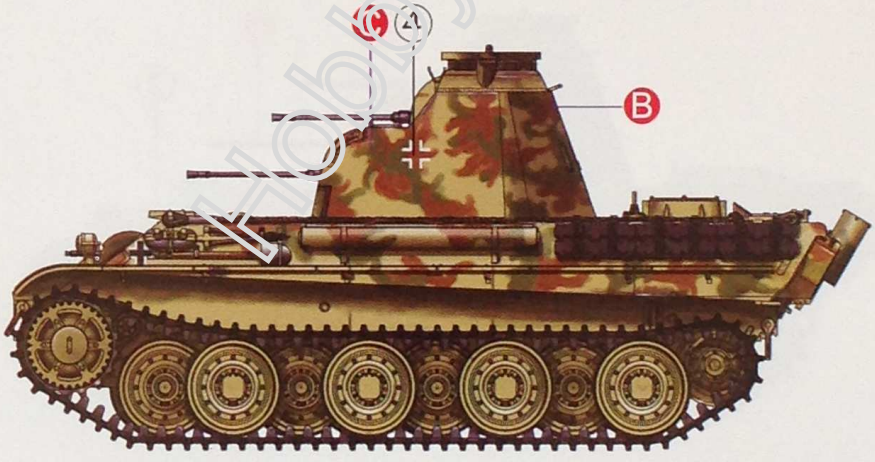

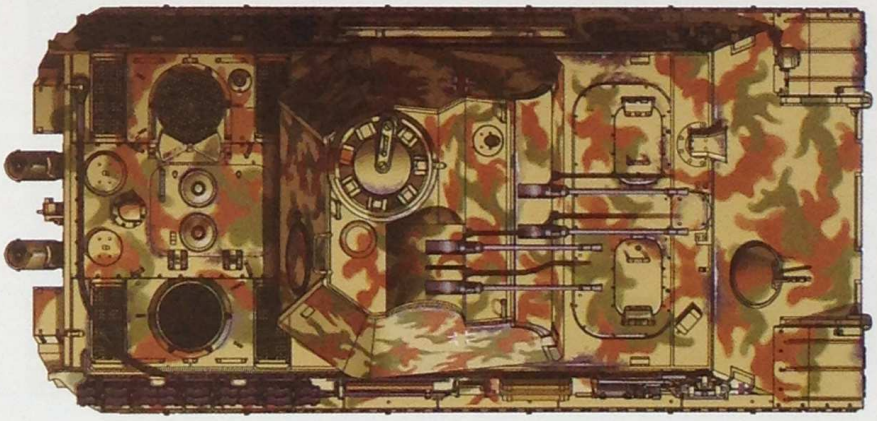

Hobby.dn.ua

Paint Option 3:

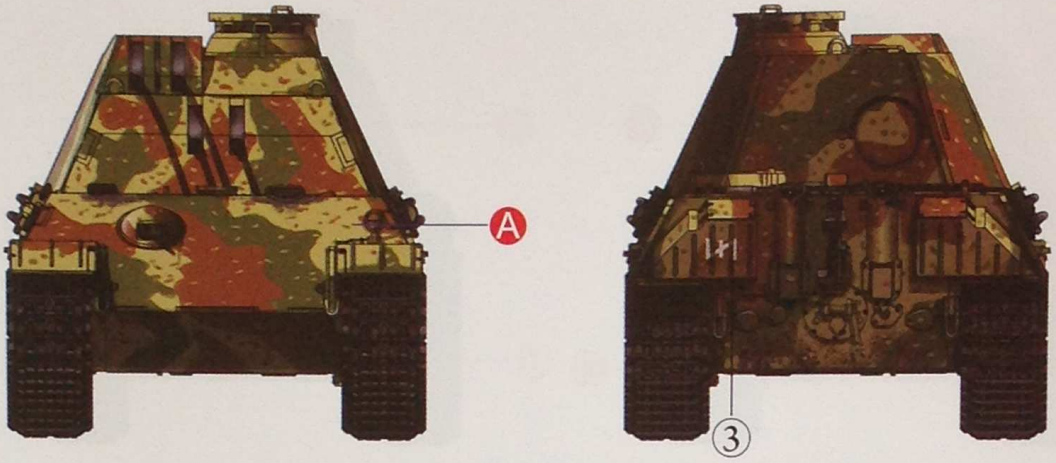

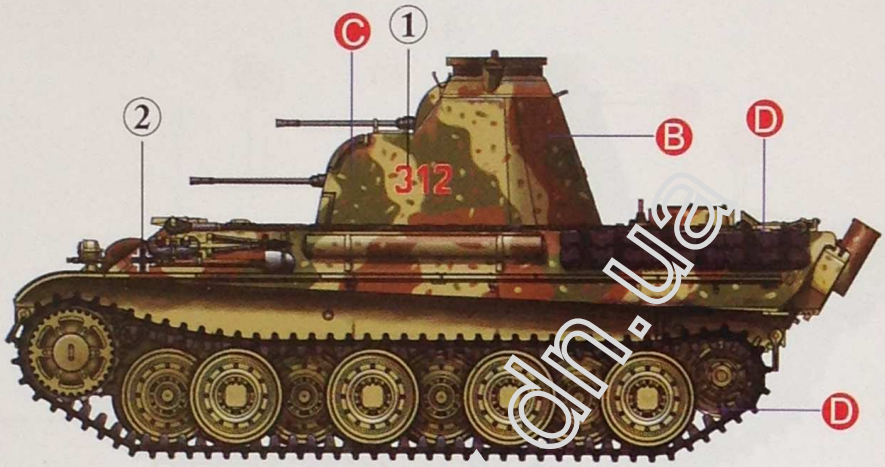

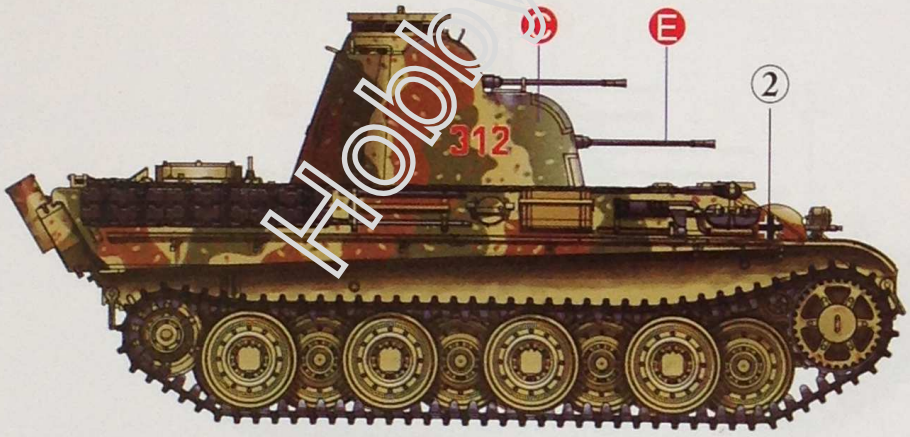

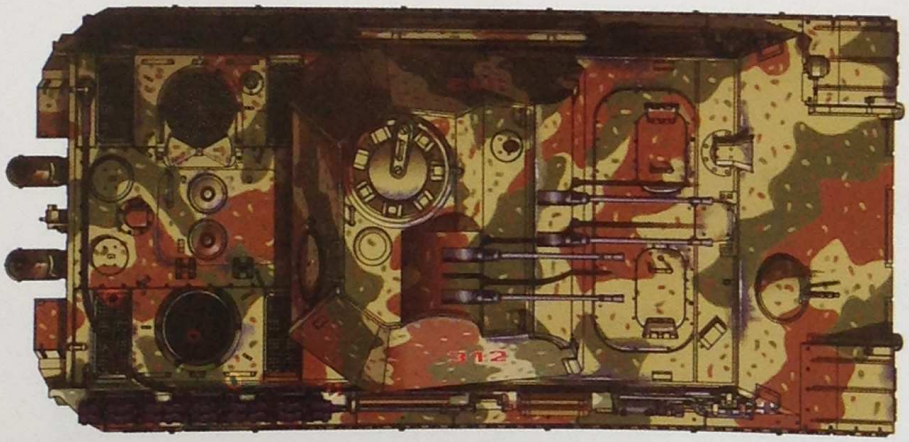

Hobby.dn.ua