注意事项　CAUTION　組み立てのご注意

(1) 勿于近火处使用胶水或油漆，并打开窗户保持空气流通。
(2) 涂料的号码请参考本栏以下的说明。本品本身不包括胶水和涂料。
(3) 自板件中取出部件时，应用模型专用剪，并用介刀或小锉除去多余胶料。
(4) 各图形的含义可参考本栏以下说明。

(1) When you use glue or paint,do not use near a open flame,and use in a well-ventilated room.
(2) See below for the color list.Glue and paint are not included in the kit.
(3) When you take parts off the runner frame,use the modeling scissors and trim excess plastic with a cutter or a flie.
(4) See below for the meaning of symbols.

(1) 接着剤や塗料は火の近くで使わないで下さい、使用の際は換気をよくして下さい。
(2) 塗料指定のは下記のとおりです、接着剤や塗料は入っていませんので別に求めって下さい。
(3) 部品のランナーから切り離す時は模型用ハサミ等を使い、余分な部分はカッターやヤスリ等で仕上げて下さい。
(4) 組立図のサインマークは下の説明を御覧下さい。

图形含义　CAUTION　マーク

填平
FILL HOLE
穴を埋めて下さい

水印粘纸
APPIY DECAL
デカールを貼って下さい

切除
CUT OFF
切り取って下さい

弯折
BEND
折り曲げて下さい

制作两组
MAKE TWO SET
2個作って下さい

另一侧相同制作
DO THE SAME ON THE OPPOSITE
反対側も取り付けます

胶水
CEMENT
接着して下さい

钻孔
OPEN HOLE
穴を開けて下さい

选择使用
OPTIONAL
どちらを選んで下さい

不用胶水
NO CEMENT
接着しないで下さい

注意
BE CAREFUL
注意して下さい

瞬间胶
ISTANT GLUE FOE METAL
瞬間接着剤（金属用）

所使用工具　RECOMMENDED TOOLS　専用工具

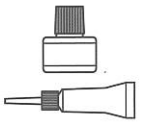
塑胶件用模型胶水
Cement
プラスチック用接着剤

模型用瞬间胶水
Insant Cement
瞬間接着剤

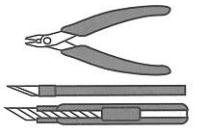
模型用剪钳
Side cutters
模型用ニッパー

模型用刻刀
Modeling knife
模型用ナイフ

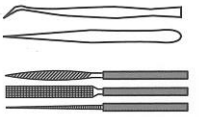
模型用镊子
Tweezers
ピンセット

模型用锉刀
Diamond file
模型用ヤスリ

水贴纸使用说明　DECAL APPLICATION　スライドマークの貼り方

(1) 用模型剪刀或刻刀切下所需的图案部分。
(2) 将水贴纸侵泡在温水中10秒左右取出放置于戏水的干布上。
(3) 手拿着水贴纸基的一角，用模型镊子小心夹住浮起的水贴图案移至模型表面准确位置。
(4) 用手指适当沾水均匀涂于水贴图案表面，使其延展移动至精确位置。
(5) 用柔软吸水的干布将水贴图案中的气泡向一边挤出，使水贴在模型表面保持平整。

(1) Cut off decal from sheet.
(2) Dip the decal in tepid water for about 10 sec. and place on a clean cloth.
(3) Hold the backing sheet edge and slide decal onto the model.
(4) Move decal into position by wetting decal with finger.
(5) Press decal down gently with a soft cloth until excess water and air bubbles are gone.

(1) 貼りたいマークをハサミで切り抜きます。
(2) マークをぬるま湯に10秒ほど浸してからタオル等の布の上に置きます。
(3) 台紙のはしを手で持ち、貼るところにマークをスライドさせてモデルに移して下さい。
(4) 指に少し水を付けてマークを濡らしてながら、正しい位置にずらします。
(5) 柔らかな布でマークの内側の気泡を押し出しながら、押しつけるようにして水分をとります。

蚀刻片使用说明　PHOTO-ETCHED PARTS　エッチングパーツ

(1) 使用蚀刻片专用剪刀或模型专用刻刀将蚀刻片零件切割下待用。
(2) 切割下的零件上有蚀刻片的残留连接点部分，使用模型专用锉刀细心打模干净。
(3) 蚀刻片部分在涂装之前必须使用专用的模型金属底漆打底。
注意事项：蚀刻片很薄外延较为尖锐，有刮伤手的可能，在使用之时请务必小心。

(1) Cut off photo-etched parts using a modeling knife.
(2) Carefully remove any excess using a file.
(3) Apply metal primer prior to painting.
Attention, please: Extra care should be taken to avoid personal injury when handiling photo-etched parts.

(1) 切り離す時はカッターナイフを使用してパーツを切り離します。
(2) 切り出した時、部品に出っ張った部品が残っている場合は、ヤスリなどで丁寧に削り落とします。
(3) 塗装が必要なパーツは下地にメタルプライマーを吹き着けてから塗装します。
ご注意：エッチング—パーツは大変薄く、手などを切り恐れがあります。取扱いには十分注意して下さい。

涂装色表　PAINT REQUIRED　カラー番号リスト

■ C 000 GSI CREOS Mr.COLOR　■ 00-000 ACRYLICOS VALLEJO

C 1	亮光白	White
C 2	亮光黑	Black
C 3	亮光红	Red
C 4	亮光黄	Yellow
C 5	亮光蓝	Blue
C 8	亮光银	Silver
C 10	金属铜	Copper
C 13	中灰	Grey

C 20	浅蓝	Light blue
C 25	暗海蓝	Dark sea blue
C 28	黑铁色	Black iron
C 31	军舰灰	Warship ash
C 33	消光黑	Extinction black
C 35	明灰白	Bright gray
C 45	帆布色	Canvas
C 47	透明红	Clear red

C 50	透明蓝	Clear blue
C 55	卡其色	Khaki
C 60	RLM02灰	Rlm02 grey
C 61	烧铁色	Burnt iron
C 62	消光白	Extinction white
C 65	亮光蓝	Light blue
C 73	飞机灰	Aircraft Grey
C 74	天空蓝	Sky blue

C 79	朱红色	Red
C 92	半光黑	Semi Gloss Black
C 100	亮光褐	Bright brown
C 117	RLM76浅蓝	Rlm76 light blue
C 136	草绿色	Grass green
C 137	轮胎黑	Tire black
C 301	灰FS36081	Grey FS36081
C 305	灰FS36118	Grey FS36118

C 308	灰FS36375	Grey FS36375
C 311	棕FS30219	Brown FS30219
C 316	光泽白FS17875	Glossy white FS17875
C 318	浅土黄	Light earthy yellow
C 319	薄松叶色	Pine leaf
C 323	淡蓝色	Light blue
C 324	浅灰色	Light grey
C 333	海灰色	Sea grey

C 337	灰蓝色	Grey blue
C 338	淡灰FS36495	Grey FS36495
C 363	中海灰色	Sea grey
C 392	机体内部蓝色	Aircraft Blue
GX 109	超级透明棕	Super clear brown
SM 201	超级银色	Super Silver
SM 203	超级铁色	Super Iron
SM 206	超级烙铁色	Super soldering iron

A Part×1

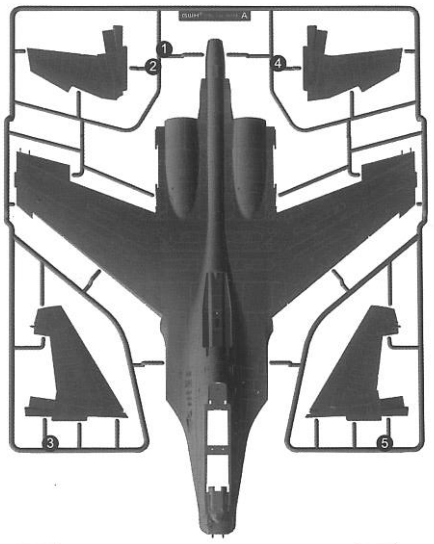

B Part×1

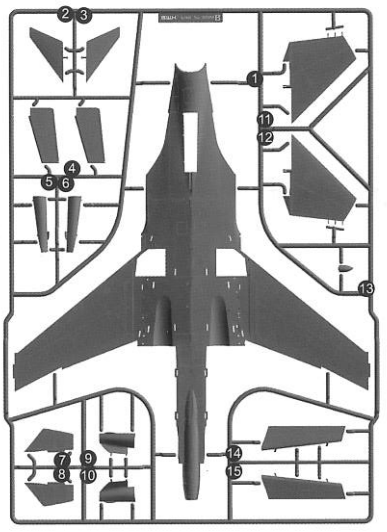

H1 Part×1

H2 Part×1

C Part×1

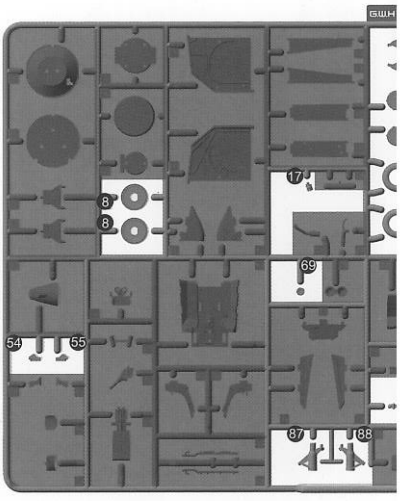

L Part×2

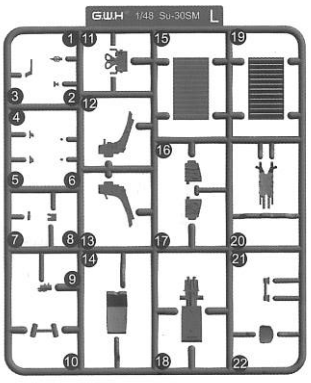

E Part×1

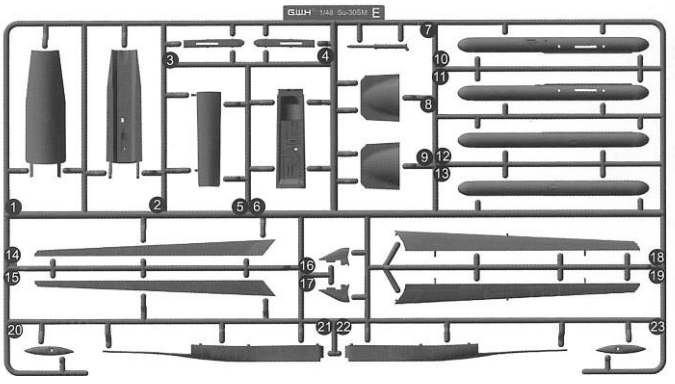

K Part×1

J Part×1

I Part×1

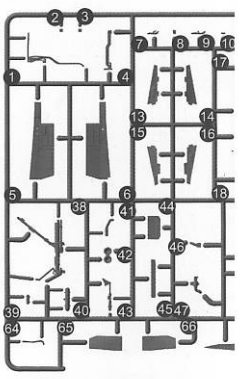

W Part×1

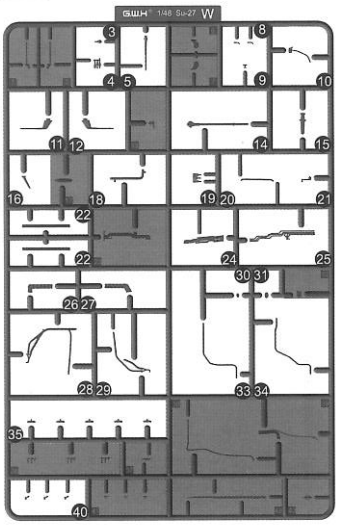

G Part×1

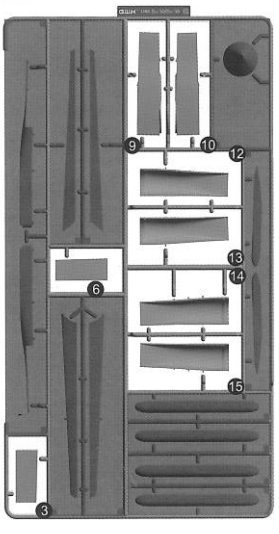

AKU-58 Part×3

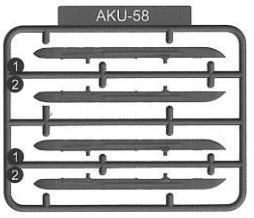

Kh-59 Part×4

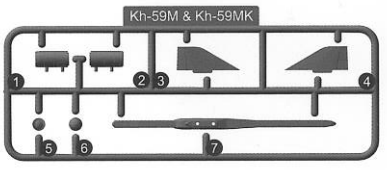

KAB-500Kr Part×

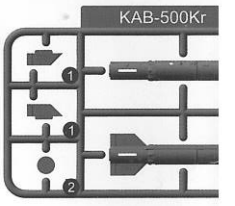

TBD3 Part×4

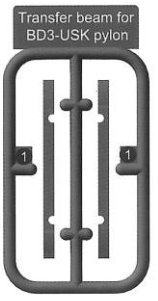

Kh-59MK Part×2

Kh-59M & APK-9 Part×2

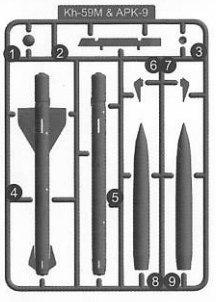

FAB-500M-6

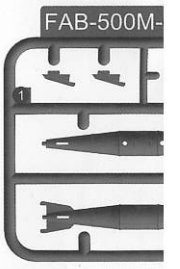

P Part×4

O Part×4

Kh-59M Part×1

KAB-500Kr Part×1

FAB-500M-54 Part

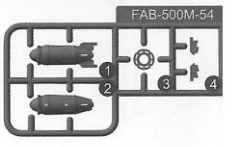

-30SM "侧卫-H" 多用途战斗机 零件表 | PARTS LIST パーツリスト

1/48 SCALE L4830 AIRCRAFT

D Part×2

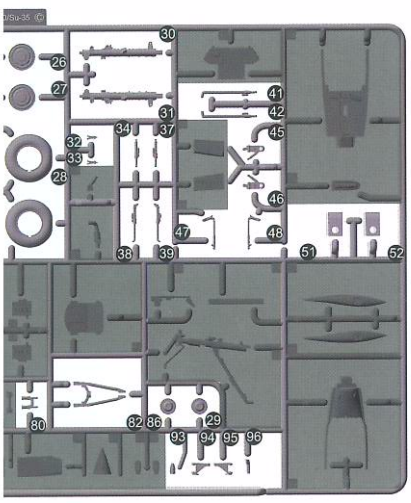

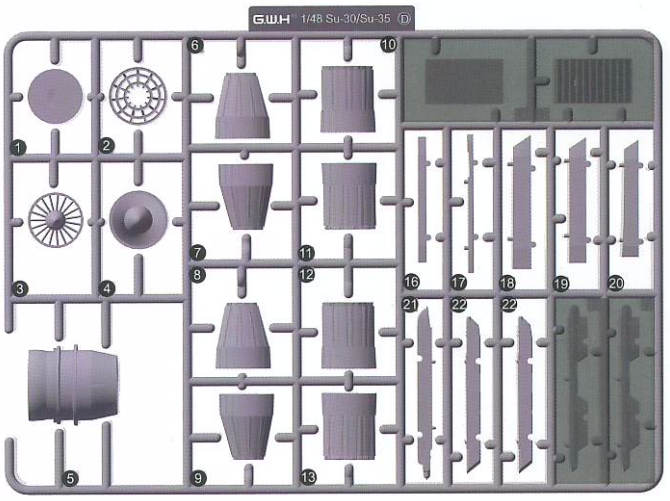

F Part×2 **T** Part×2 **S** Part×1

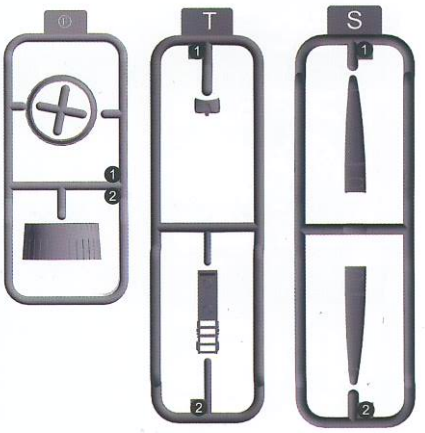

N Part×1

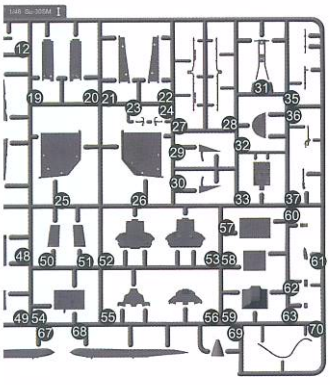

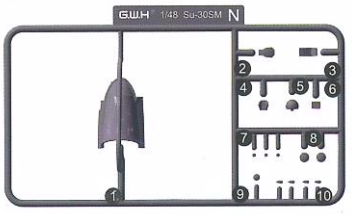

M Part×1 **R** Part×1

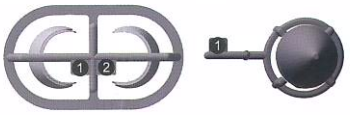

Q Part×1

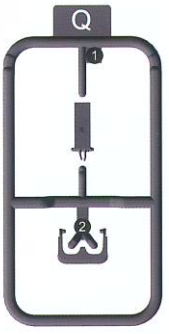

BD3-USK Part×8

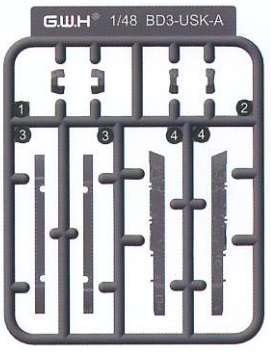

Twin Launcher Part×4

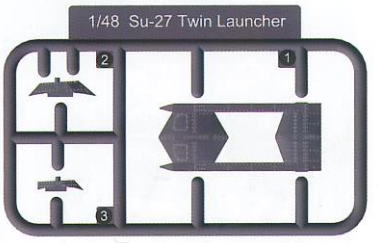

B-13L Part×4

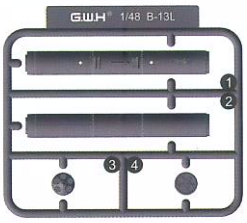

KAB-500L Part×2

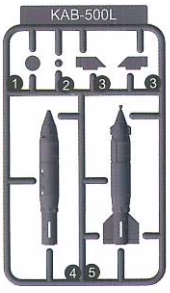

Part×2 **B-8M** Part×4

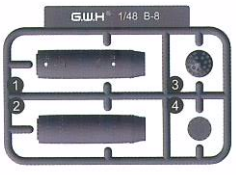

Kh-31AD Part×2

Decal A

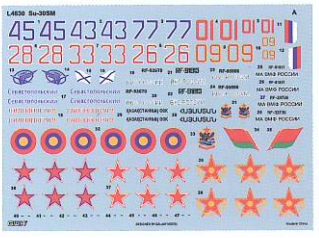

Decal B

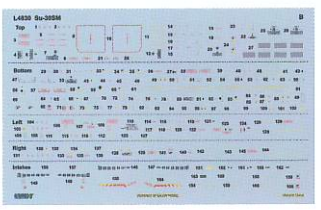

Decal C

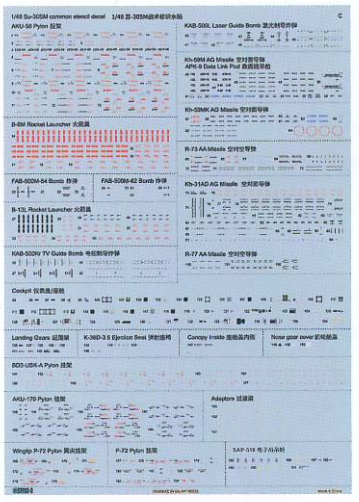

Film

Metal Part

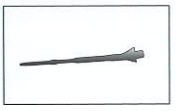

Pre-cut masking tape for windshield canopy

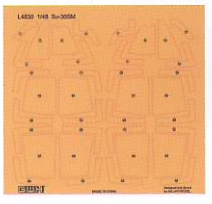

PE A

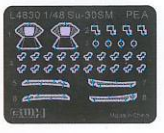

阴影零件不使用
DO NOT USE THE SHADOW PARTS

L4830 Su-30SM "Flanker-H" Multi-role Fighter

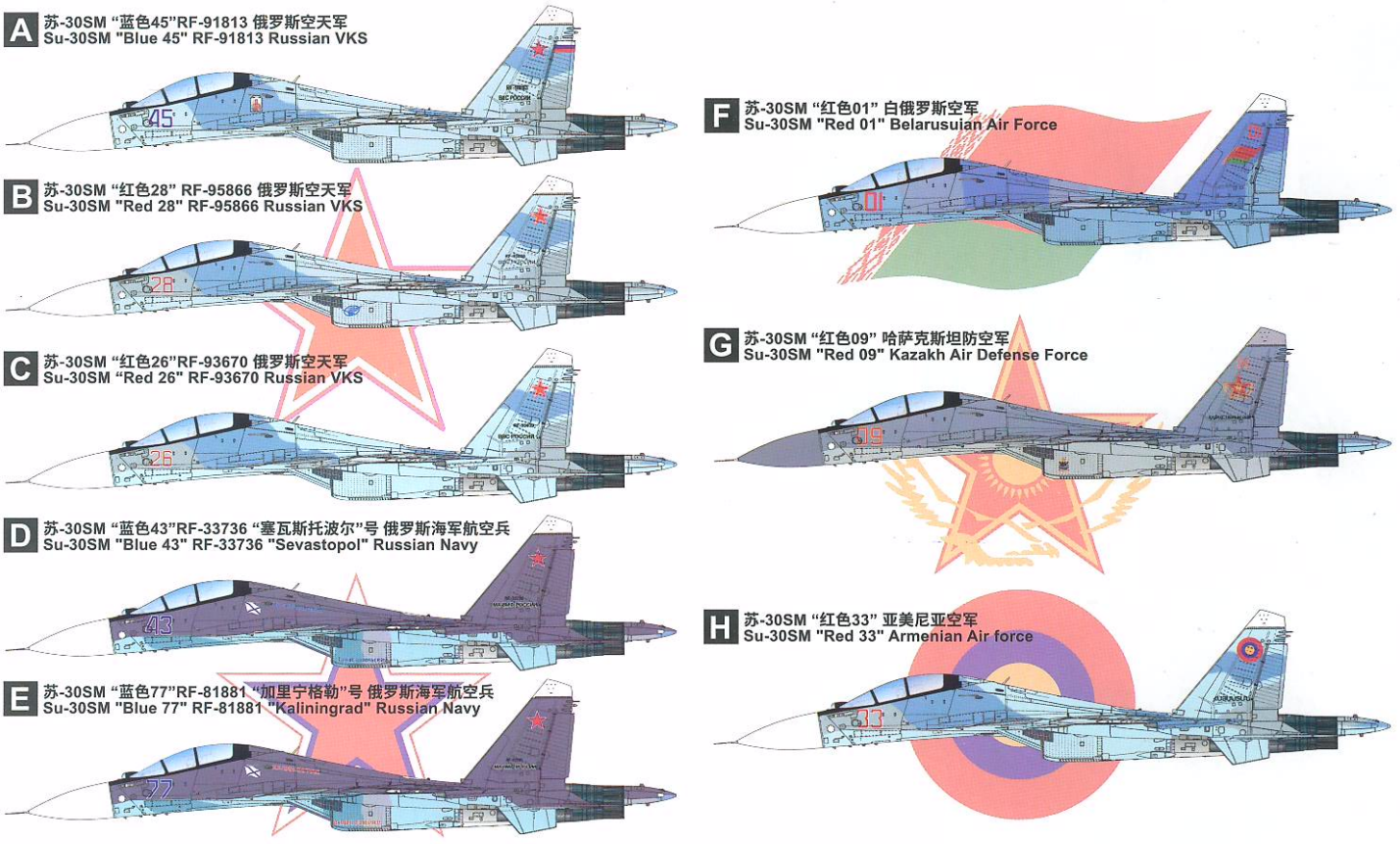

Special thanks to design supervisors Mr. Yufei Mao and Mr. Smalkov Vitaly Nikolaevich

苏-30SM是安装矢量推力发动机的苏-30MKI的升级版，由伊尔库特公司生产（SM为俄语Serijnyi Modernizirovannyi，“Serial Modernized”即升级量产型的缩写），北约代号为“侧卫-H”。

苏-30SM被认为是第4代+战斗机，根据俄罗斯军方对雷达、无线电通信系统、敌我识别系统、弹射座椅、武器和其他系统的要求进行了升级。它配备了N011M“豹”雷达，最大探测距离为400公里，搜索范距离为200公里，使用广角HUD、相控阵天线、全动水平尾翼和矢量推力发动机以实现超机动性。该机可使用各种武器，包括空对空/空对地导弹以及制导/非制导炸弹，挂载重量高达8吨，可在对地面目标发起攻击的同时牢固掌握战场制空权。它还配备了单管30毫米GSh-30-1航炮并具备空中加油能力。此外，该机可在翼尖上安装SAP-518电子战吊舱用于电子对抗，通过制造虚假目标、干扰雷达和导弹的搜索制导能力来压制敌方战斗机和地面/海上防空系统，保护飞机免受各种空空和地空导弹的攻击。

由于俄罗斯国防部对出口型苏-30MKI的性能印象深刻，因此分别于2012年3月和12月分两批订购了总共60架苏-30SM战斗机。2012年9月21日，苏-30SM进行了首飞，俄罗斯空天军于2012年11月22日接收了首批2架。此后，俄国防部于2016年4月追加订购了36架，其中6架用于俄罗斯海军航空兵。该机也出口至前独联体国家，包括白俄罗斯、哈萨克斯坦、亚美尼亚等国。

2015年9月，俄罗斯首次向位于叙利亚拉塔基亚的巴塞尔阿萨德国际机场派遣了4架苏-30SM战斗机。到2015年12月下旬，赫梅明空军基地总共部署了16架苏-30SM。

Su-30SM is a specialized version of the thrust-vectoring Su-30MKI for the Russian Air Force, produced by the Irkut Corporation (SM for Serijnyi Modernizirovannyi - "Serial Modernized"), NATO reporting name "Flanker-H".

Su-30SM is considered a 4+ generation fighter jet, which has been upgraded according to Russian military requirements for radar, radio communications systems, friend-or-foe identification system, ejection seats, weapons, and other aircraft systems.It is equipped with the N011M Bars radar with a maximum detection range 400 km, search range 200 km using a phased array antenna, frontal horizontal fins and steerable thrusters for super maneuverability as well as with wide-angle HUD.The aircraft can be used to gain air supremacy same as for targeting adversary on the ground using wide range of weapons including air-to-air, air-to-surface and guided and unguided bombs with total weapons weight up to 8,000 kg. It is also equipped with the one barrel, 30 mm GSh-30-1 auto cannon. To ensure operations at major distances from airfield, the ability of in-flight refueling (IFR) is included. Besides that, for electronic warfare purposes two SAP-518 jamming pods can be fitted on the wing tips. The SAP-518 is designed to protect the aircraft from various air-to-air and surface-to-air missiles by creating false targets, jamming missile's guidance, enemy aircraft radars or ground and seaborne air defense.

Russian Defense Ministry was impressed with the export Su-30MKI's performance envelope and ordered a total of 60 Su-30SM fighters, under two contracts signed in March and December 2012, respectively.On 21 September 2012, the Su-30SM performed its maiden flight and Russian Air Force has received first two serial aircraft on 22 November 2012. Another 36 aircraft were ordered in April 2016, six of which intended for the Russian Naval Aviation.

In September 2015, Russia has deployed for the first time 4 Su-30SM fighters to the Bassel Al-Assad International Airport in Latakia, Syria. In late December 2015, there were 16 Su-30SMs at Khmeimim Air Base. Su-30SM is also exported to former CIS countries, including Belarus, Kazakhstan, Armenia, etc..

SU-30SM
"FLANKER-H" MULTI-ROLE FIGHTER

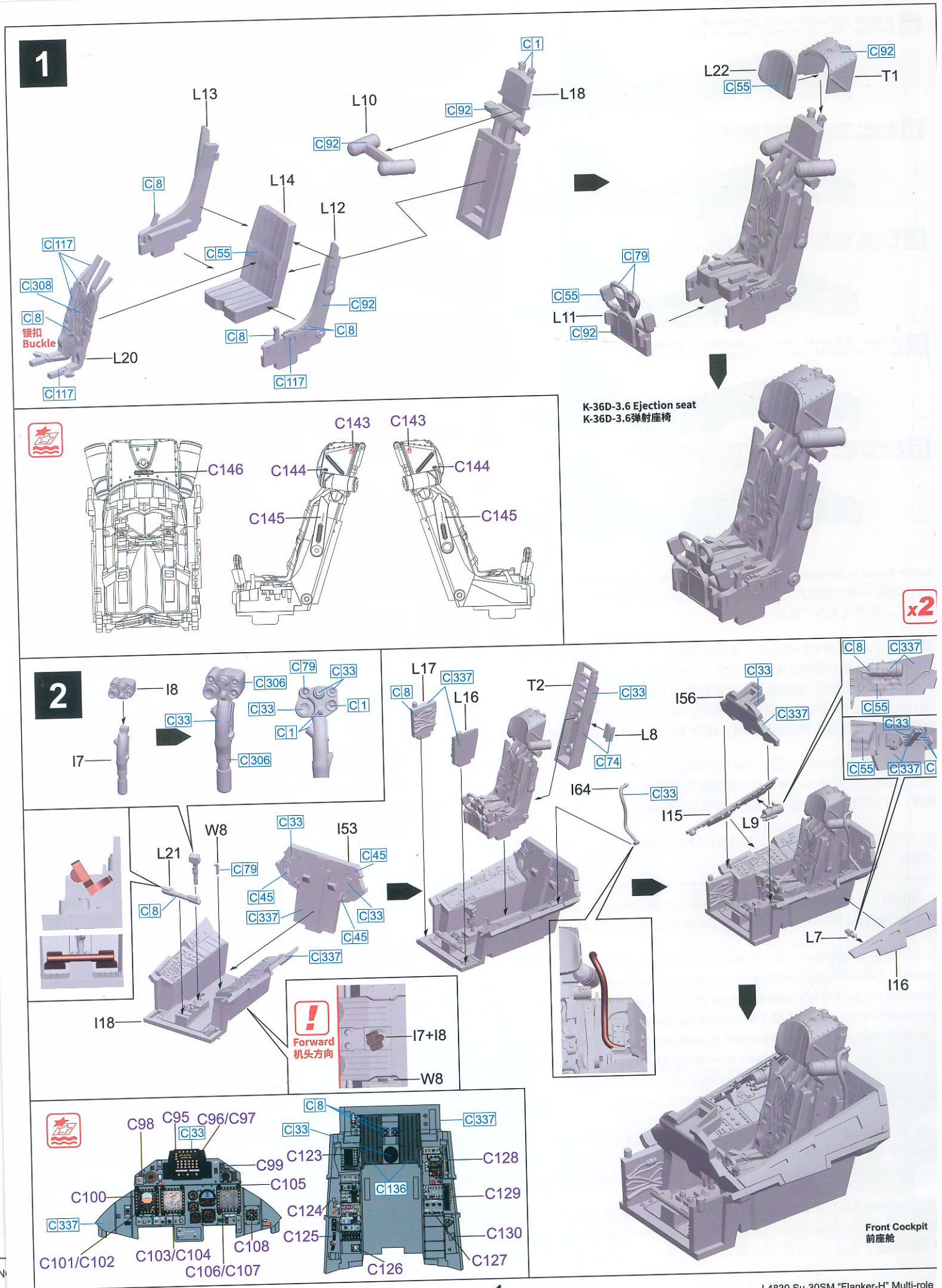
1
L13
L10
C1
L18
C92
C92
C8
L14
L12
C117
C55
C92
C308
C8
锁扣
Buckle
L20
C8
C8
C117
C117
L22
C92
T1
C55
C79
C55
L11
C92
K-36D-3.6 Ejection seat
K-36D-3.6弹射座椅
x2
C143
C143
C146
C144
C144
C145
C145
2
I8
C306
C79
C33
C33
C33
C1
C1
I7
C306
L17
C337
C8
L16
T2
C33
L8
C74
C33
I56
C337
C8
C337
C55
C33
C55
C337
C
I64
C33
I15
L9
L21
W8
C33
I53
C79
C45
C8
C45
C337
C33
C45
C337
I18
L7
I16
Forward
机头方向
I7+I8
W8
C98
C95
C96/C97
C33
C8
C33
C337
C99
C123
C128
C105
C136
C100
C129
C124
C337
C125
C130
C101/C102
C103/C104
C108
C106/C107
C126
C127
Front Cockpit
前座舱

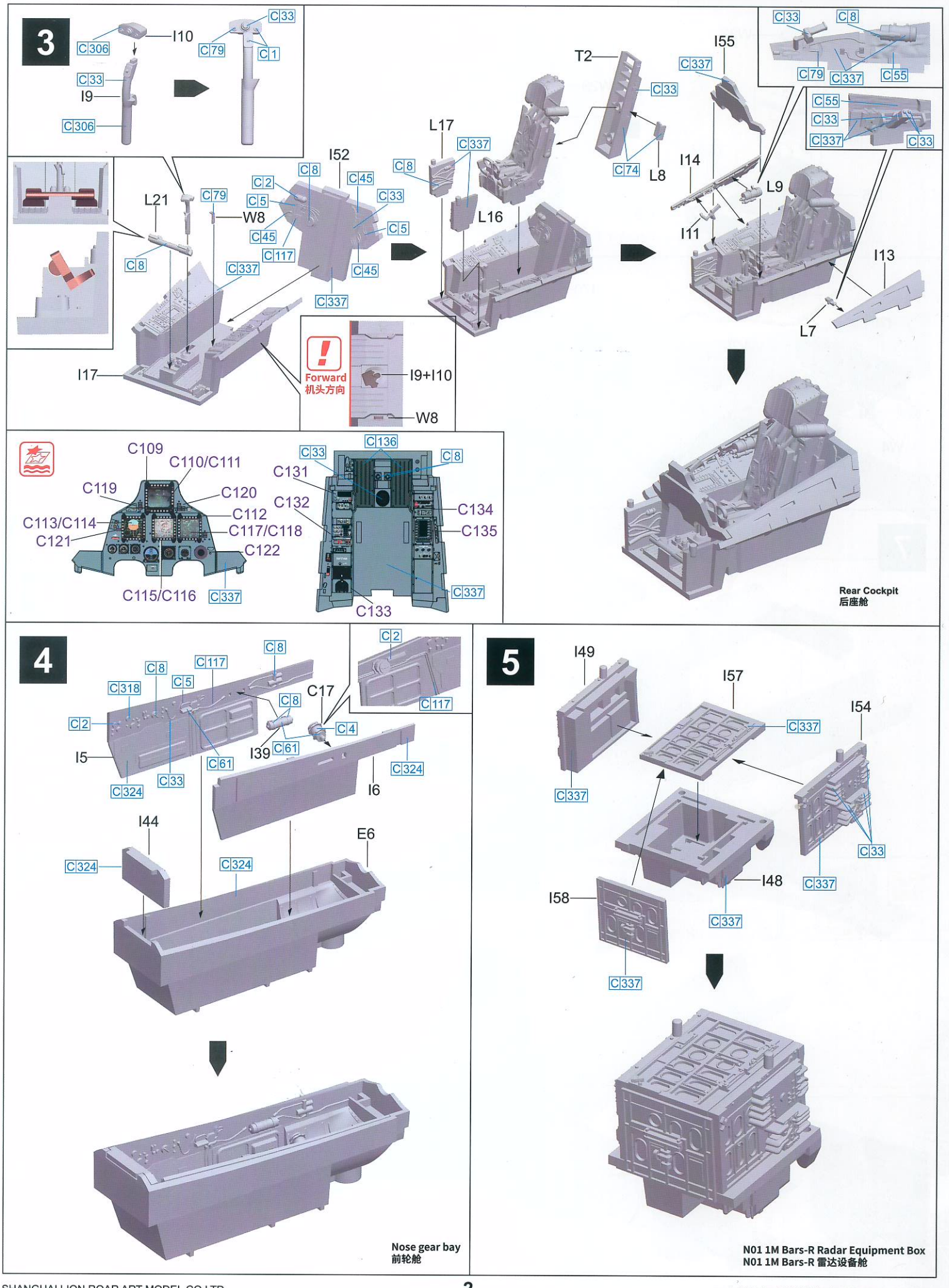
3
C306
I10
C33
C79
C1
C33
I9
C306
L21
C79
W8
C8
C337
I17
I52
C2
C8
C5
C45
C117
C45
C33
C5
C45
C337
L17
C337
C8
L16
T2
C33
C74
L8
I55
C337
I14
L9
I11
I13
L7
C33
C8
C79
C337
C55
C55
C33
C337
C33
Forward
机头方向
I9+I10
W8
C109
C110/C111
C119
C120
C112
C113/C114
C117/C118
C121
C122
C115/C116
C337
C33
C136
C8
C131
C132
C134
C135
C337
C133
Rear Cockpit
后座舱
4
C8
C117
C8
C318
C5
C2
C8
C17
C4
I5
C61
I39
C61
C324
C33
C324
I6
C2
C117
I44
E6
C324
C324
Nose gear bay
前轮舱
5
I49
I57
C337
I54
C337
C33
C337
I48
I58
C337
C337
N01 1M Bars-R Radar Equipment Box
N01 1M Bars-R 雷达设备舱

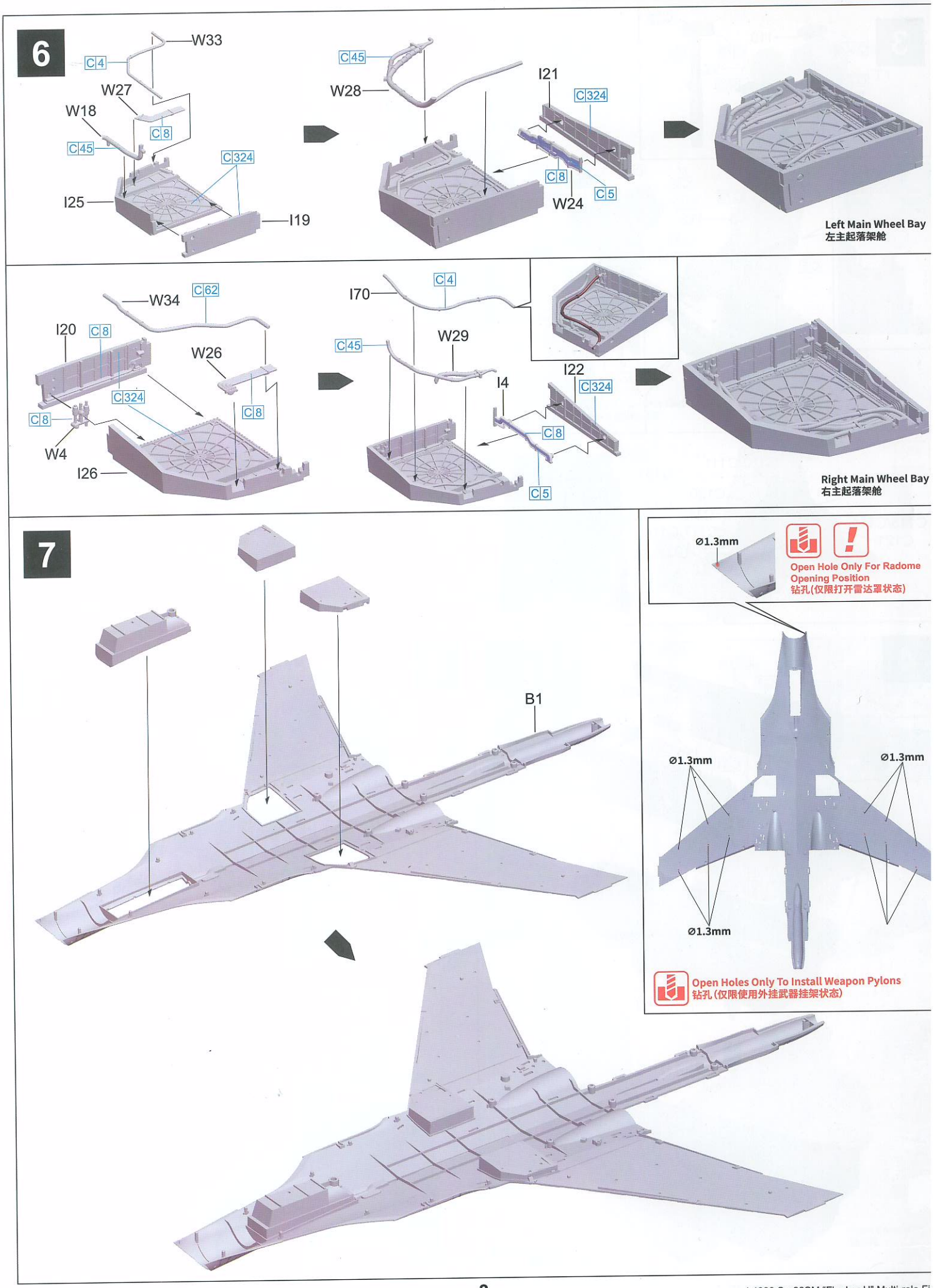
6
W33
C4
W27
W18
C8
C45
C324
I25
I19
C45
W28
I21
C324
C8
W24
C5
Left Main Wheel Bay
左主起落架舱
W34
C62
I20
C8
W26
C324
C8
C8
W4
I26
C4
I70
C45
W29
I22
C324
I4
C8
C5
Right Main Wheel Bay
右主起落架舱
7
B1
Ø1.3mm
Open Hole Only For Radome Opening Position
钻孔(仅限打开雷达罩状态)
Ø1.3mm
Ø1.3mm
Ø1.3mm
Open Holes Only To Install Weapon Pylons
钻孔(仅限使用外挂武器挂架状态)

8

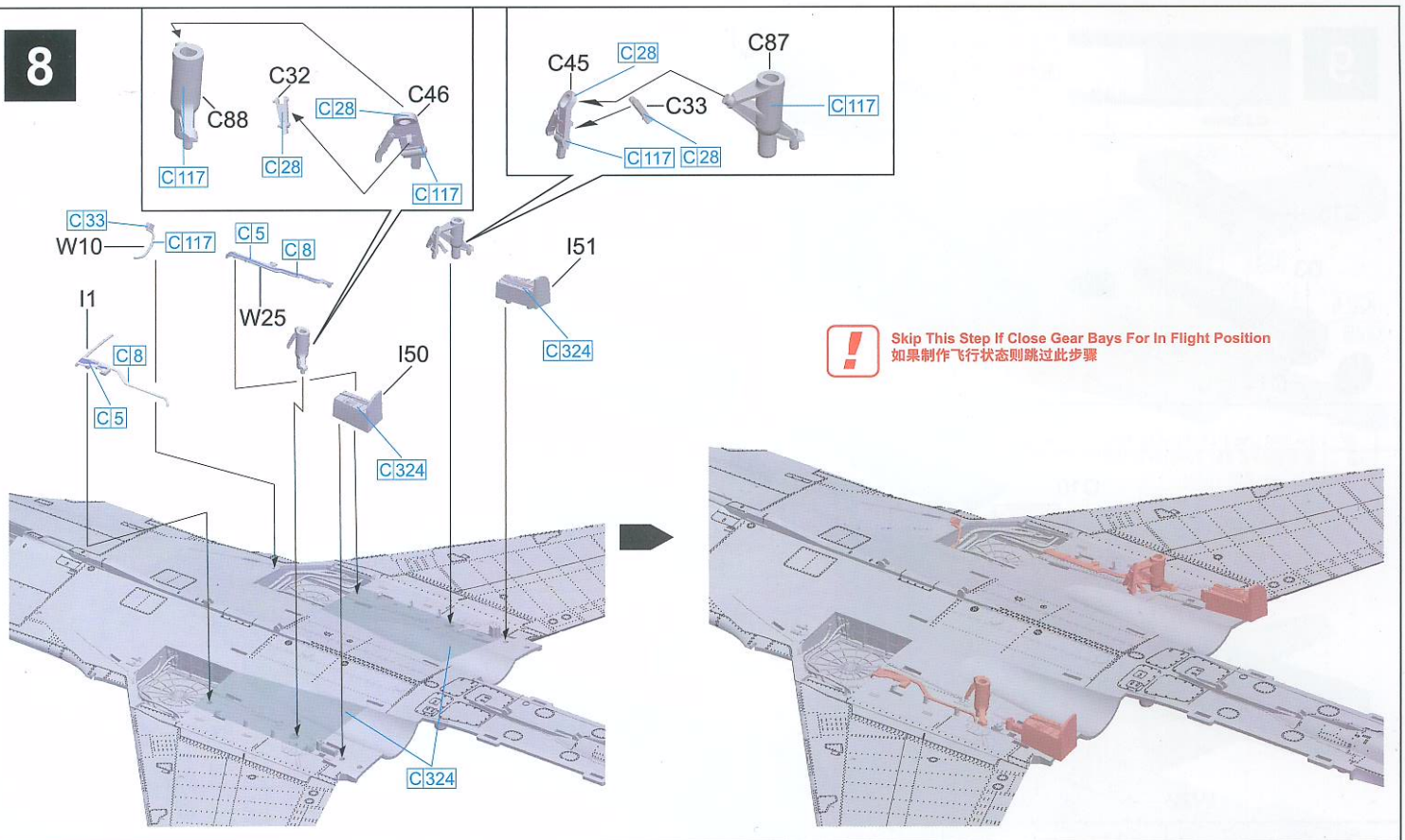
C88
C32
C46
C28
C117
C45
C87
C33
C5
C8
W10
W25
I1
I50
I51
C324
Skip This Step If Close Gear Bays For In Flight Position
如果制作飞行状态则跳过此步骤

9

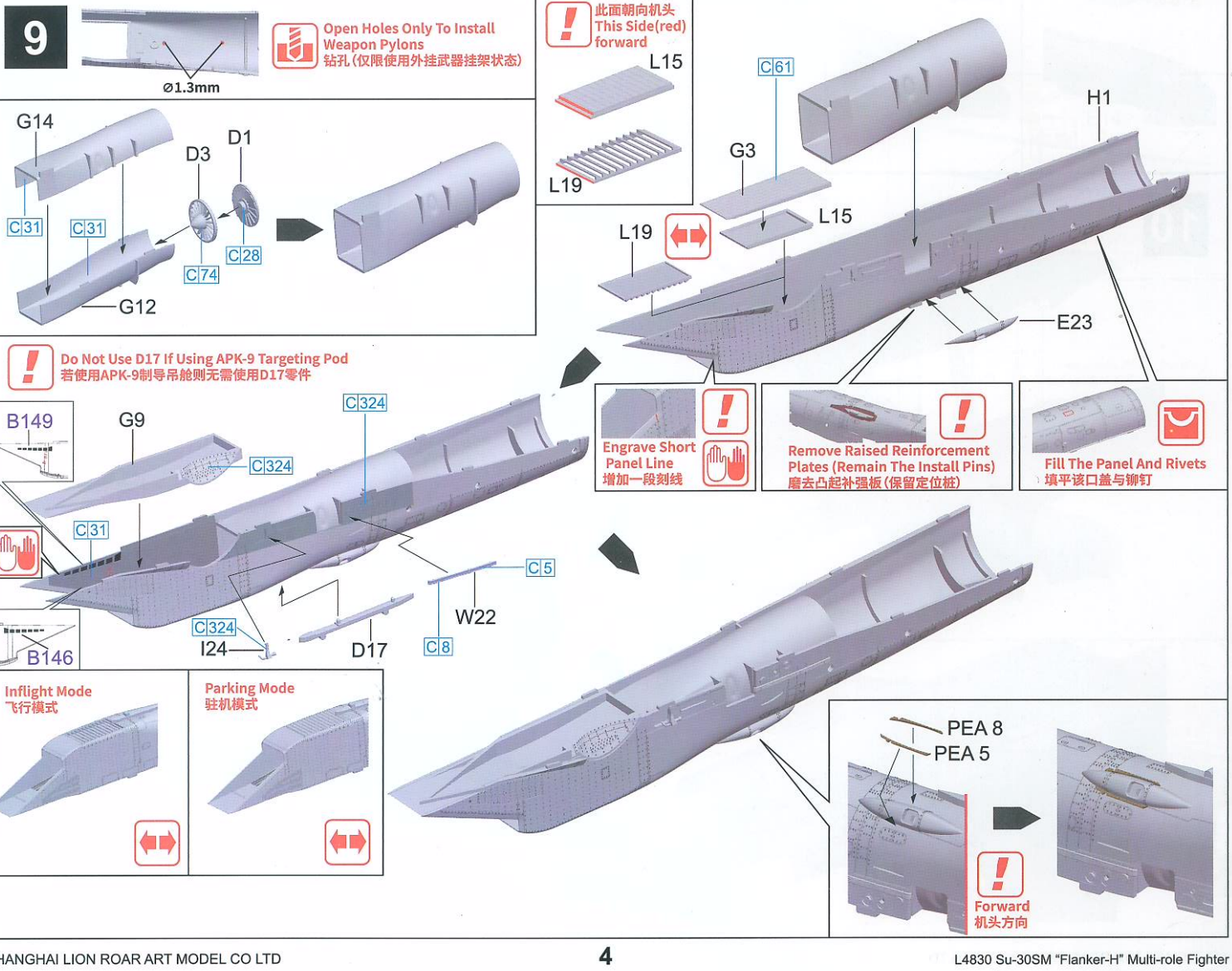
Ø1.3mm
Open Holes Only To Install Weapon Pylons
钻孔(仅限使用外挂武器挂架状态)
此面朝向机头
This Side(red) forward
L15
L19
G14
D3
D1
C31
C74
C28
G12
C61
H1
G3
E23
Do Not Use D17 If Using APK-9 Targeting Pod
若使用APK-9制导吊舱则无需使用D17零件
B149
G9
B146
I24
D17
W22
Engrave Short Panel Line
增加一段刻线
Remove Raised Reinforcement Plates (Remain The Install Pins)
磨去凸起补强板(保留定位桩)
Fill The Panel And Rivets
填平该口盖与铆钉
Inflight Mode
飞行模式
Parking Mode
驻机模式
PEA 8
PEA 5
Forward
机头方向

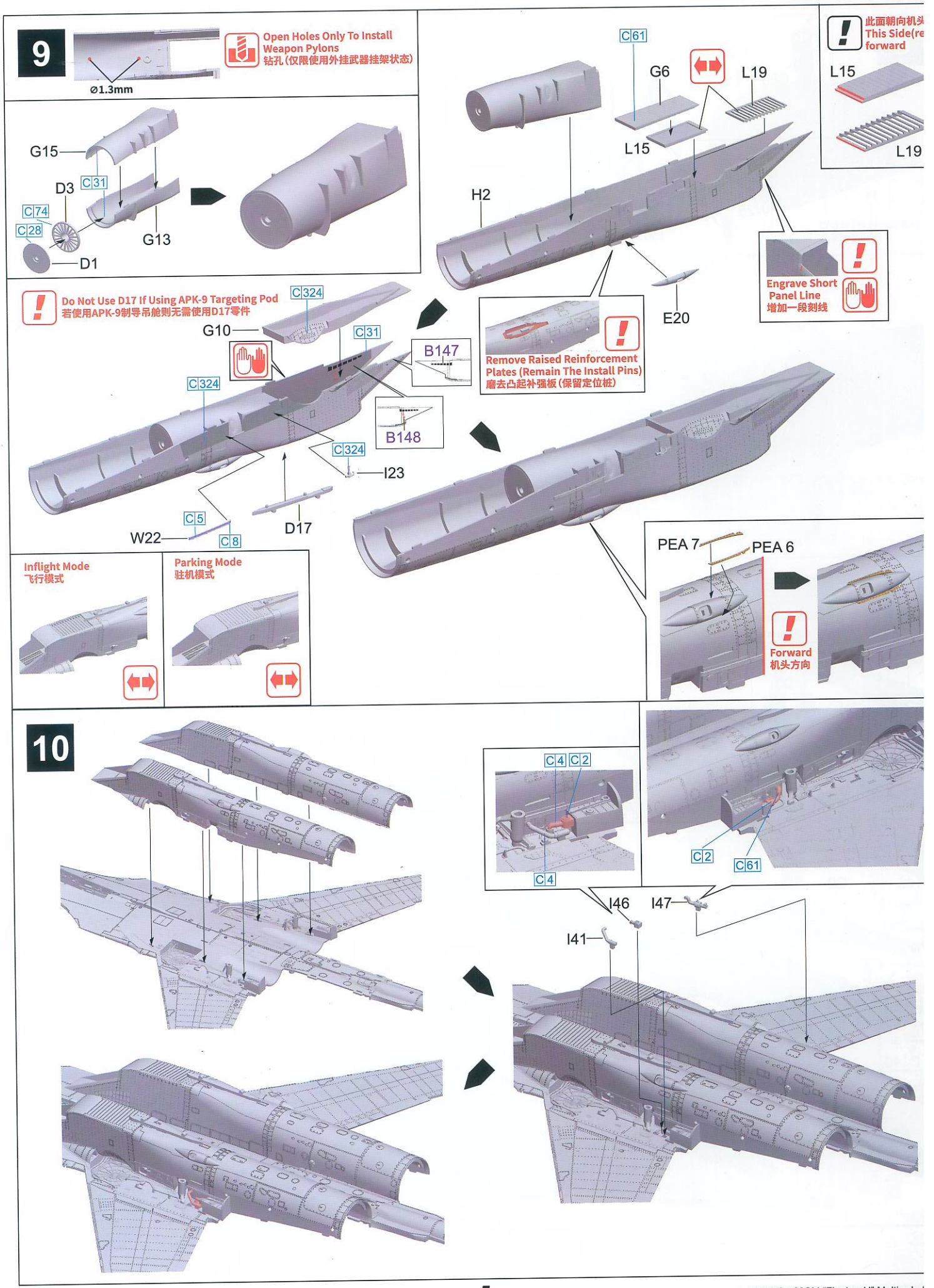
9
ø1.3mm
Open Holes Only To Install Weapon Pylons
钻孔（仅限使用外挂武器挂架状态）
G15
D3
C31
C74
C28
G13
D1
C61
G6
L19
L15
H2
E20
此面朝向机头
This Side(re
forward
L15
L19
Engrave Short Panel Line
增加一段刻线
Do Not Use D17 If Using APK-9 Targeting Pod
若使用APK-9制导吊舱则无需使用D17零件
G10
C324
C31
B147
C324
B148
C324
I23
C5
W22
C8
D17
Remove Raised Reinforcement Plates (Remain The Install Pins)
磨去凸起补强板（保留定位桩）
Inflight Mode
飞行模式
Parking Mode
驻机模式
PEA 7
PEA 6
Forward
机头方向
10
C4
C2
C4
C2
C61
I46
I47
I41

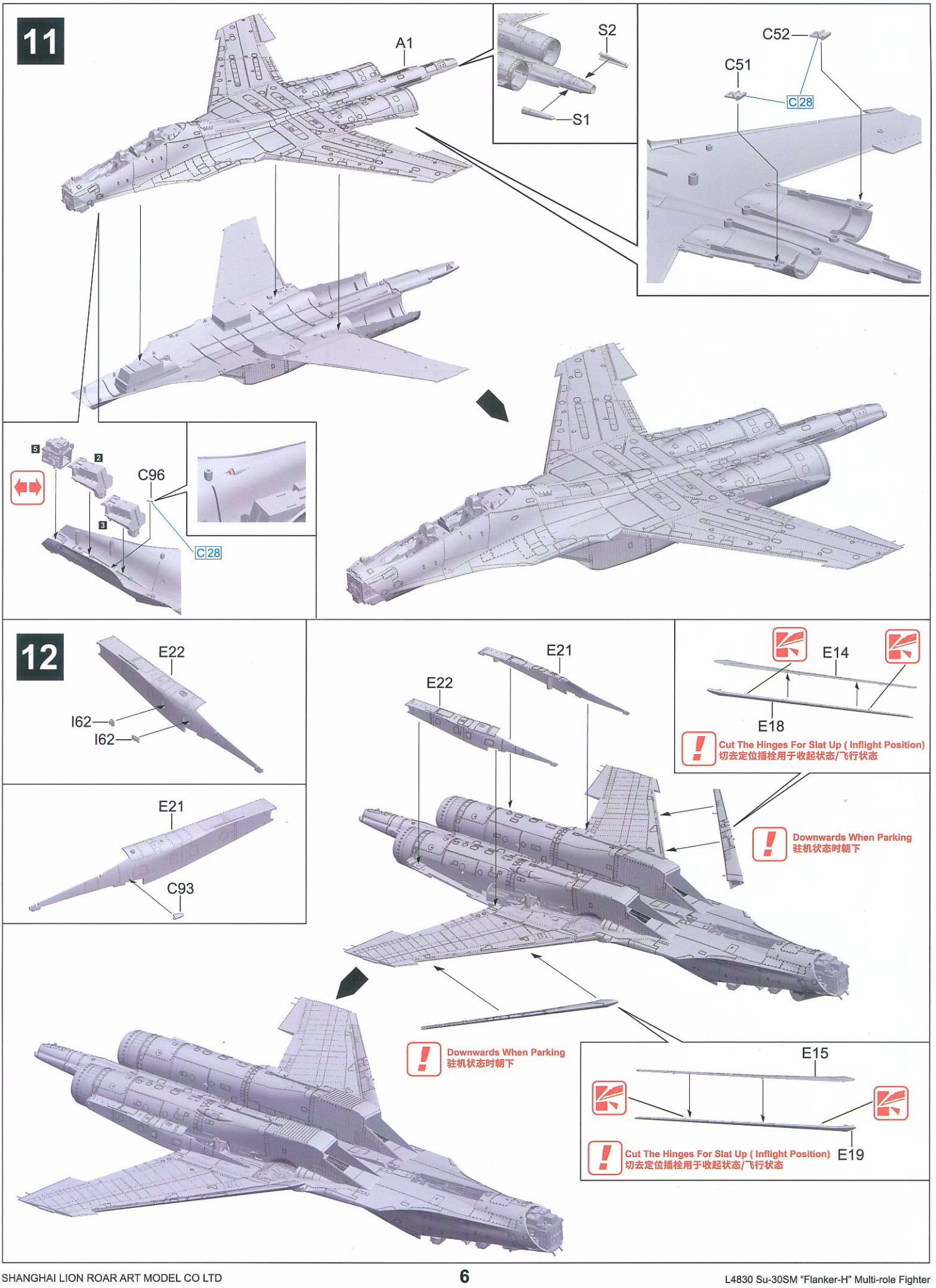
11
A1
S2
S1
C52
C51
C28
C96
C28
12
E22
I62
I62
E21
C93
E21
E22
E14
E18
Cut The Hinges For Slat Up (Inflight Position)
切去定位插栓用于收起状态/飞行状态
Downwards When Parking
驻机状态时朝下
Downwards When Parking
驻机状态时朝下
E15
Cut The Hinges For Slat Up (Inflight Position)
切去定位插栓用于收起状态/飞行状态
E19

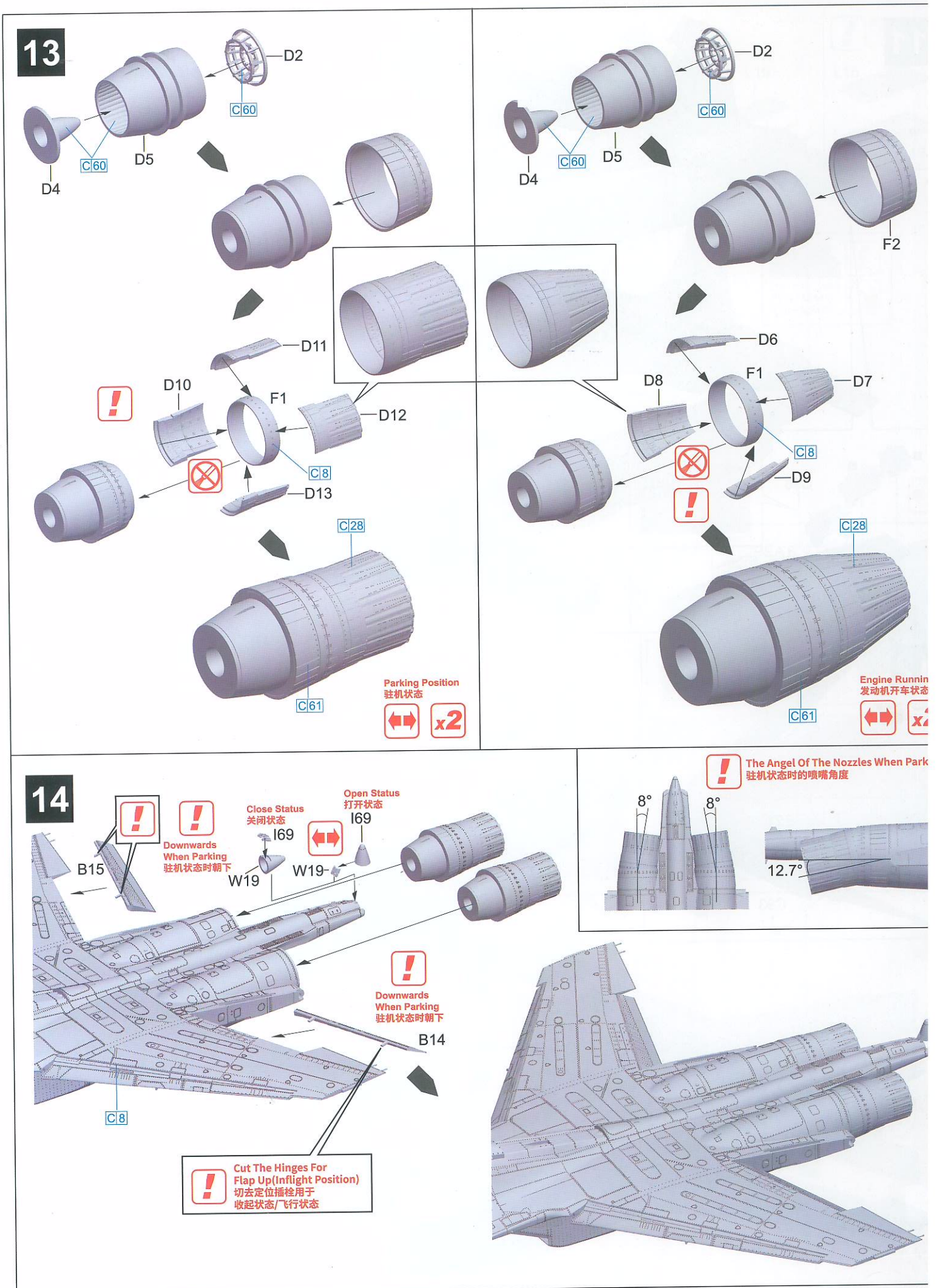
13
D2
C60
D5
D4
C60
D11
D10
F1
D12
C8
D13
C28
C61
Parking Position
驻机状态
x2
D2
C60
D5
D4
C60
F2
D6
D8
F1
D7
C8
D9
C28
C61
Engine Runnin
发动机开车状态
14
Close Status
关闭状态
I69
Open Status
打开状态
I69
Downwards
When Parking
驻机状态时朝下
B15
W19
W19
The Angel Of The Nozzles When Park
驻机状态时的喷嘴角度
8°
8°
12.7°
Downwards
When Parking
驻机状态时朝下
B14
C8
Cut The Hinges For
Flap Up(Inflight Position)
切去定位插栓用于
收起状态/飞行状态

15

Pay Attention To Assembling Order ABC
注意安装顺序ABC

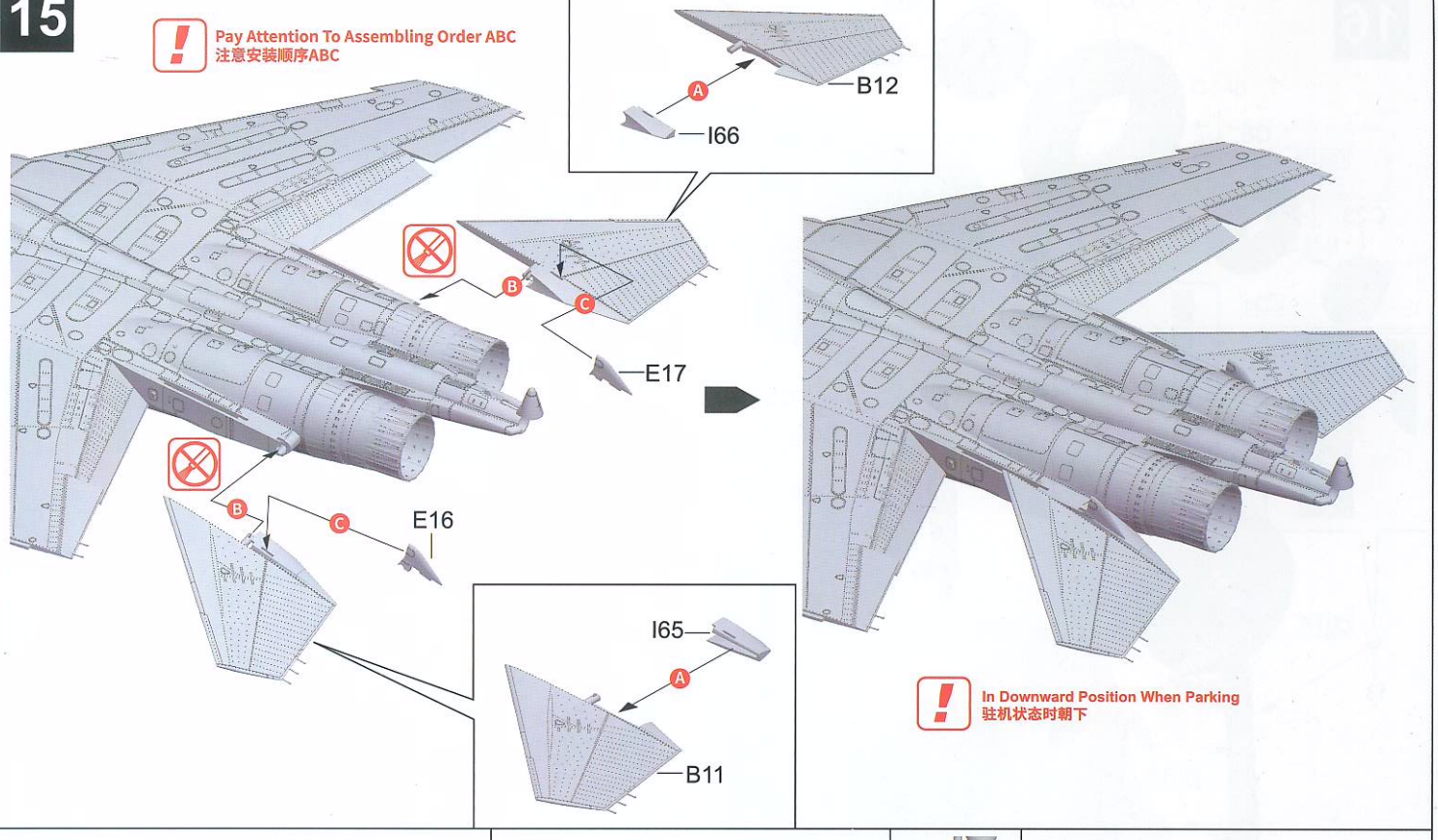

In Downward Position When Parking
驻机状态时朝下

16

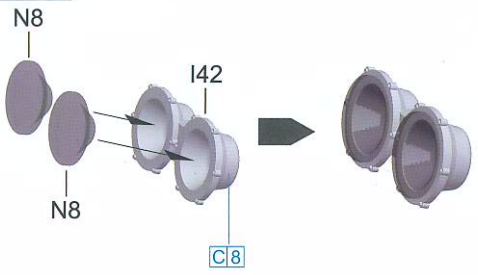

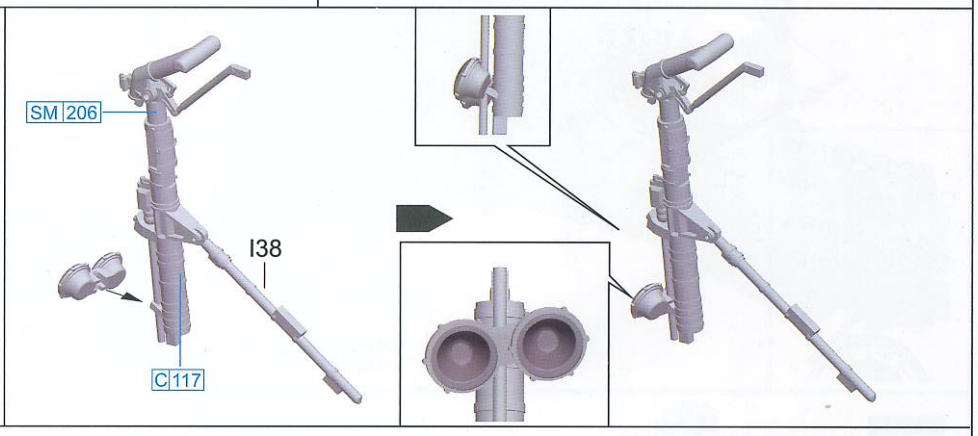

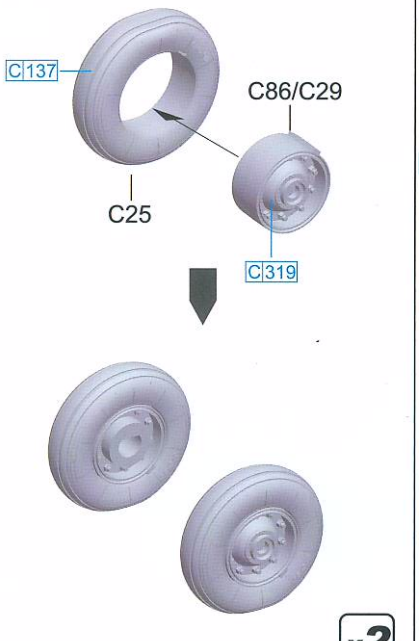

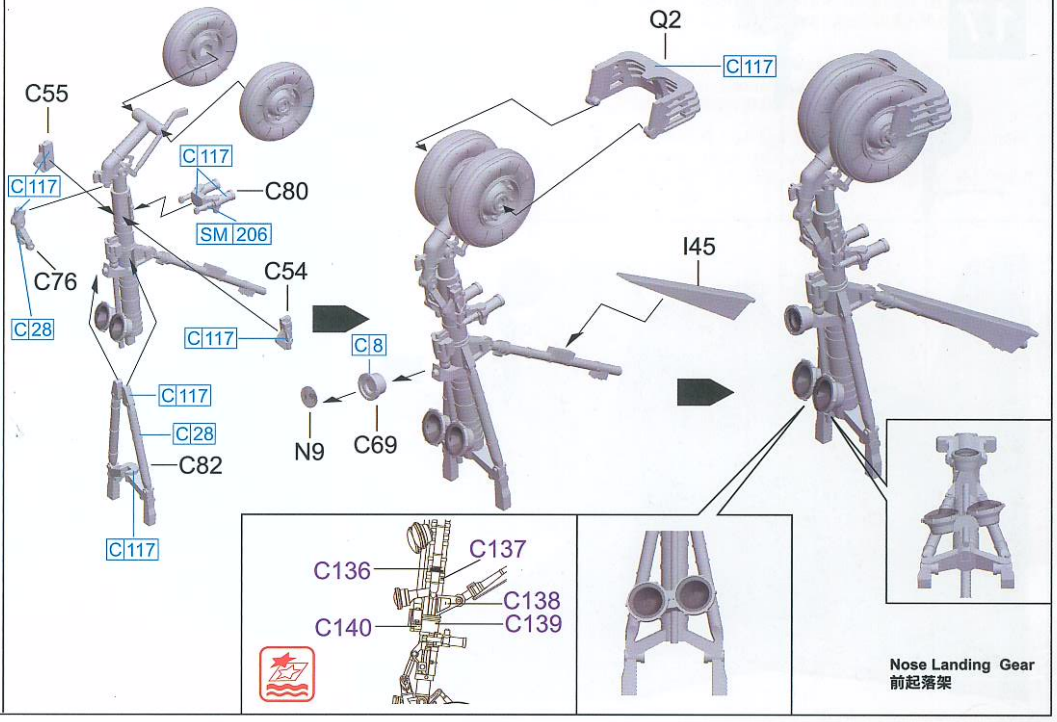

Nose Landing Gear
前起落架

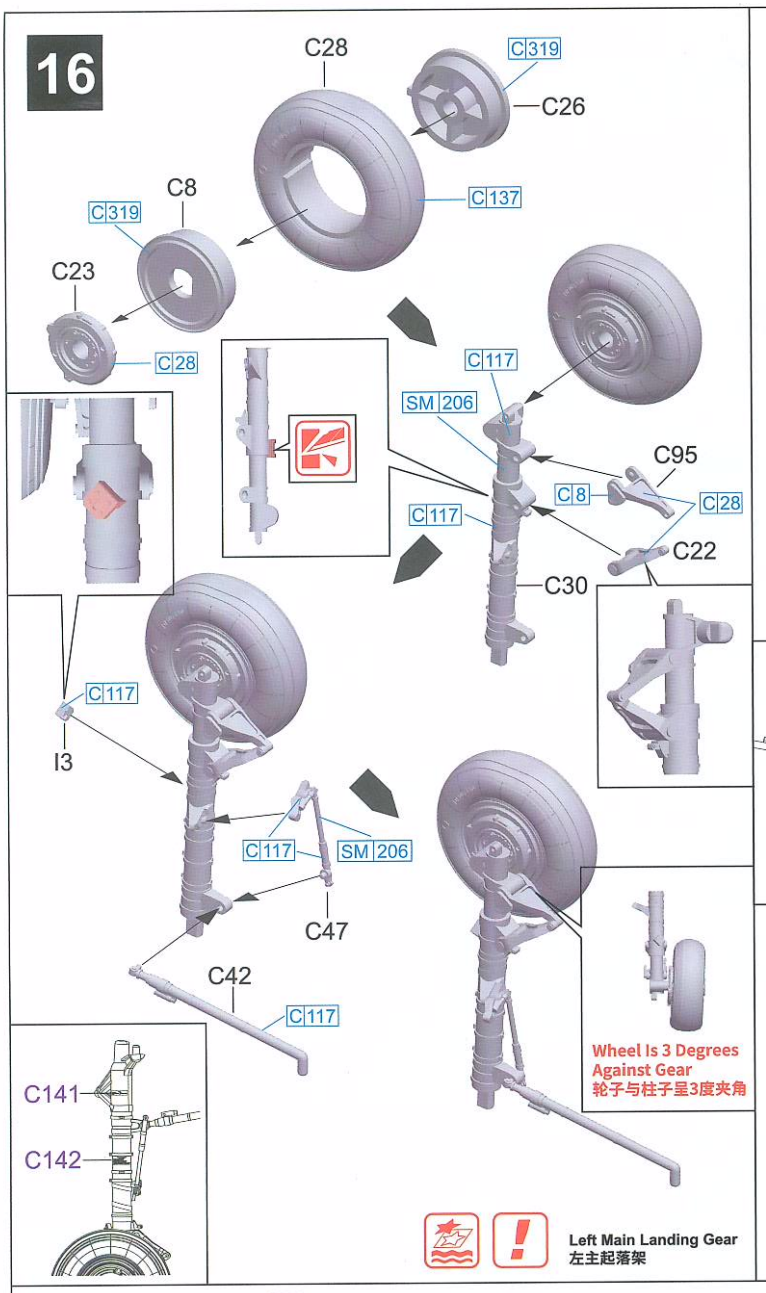
16
C28
C319
C26
C137
C8
C319
C23
C28
C117
SM 206
C95
C8
C28
C117
C22
C30
C117
I3
C117
SM 206
C47
C42
C117
C141
C142
Wheel Is 3 Degrees Against Gear
轮子与柱子呈3度夹角
Left Main Landing Gear
左主起落架

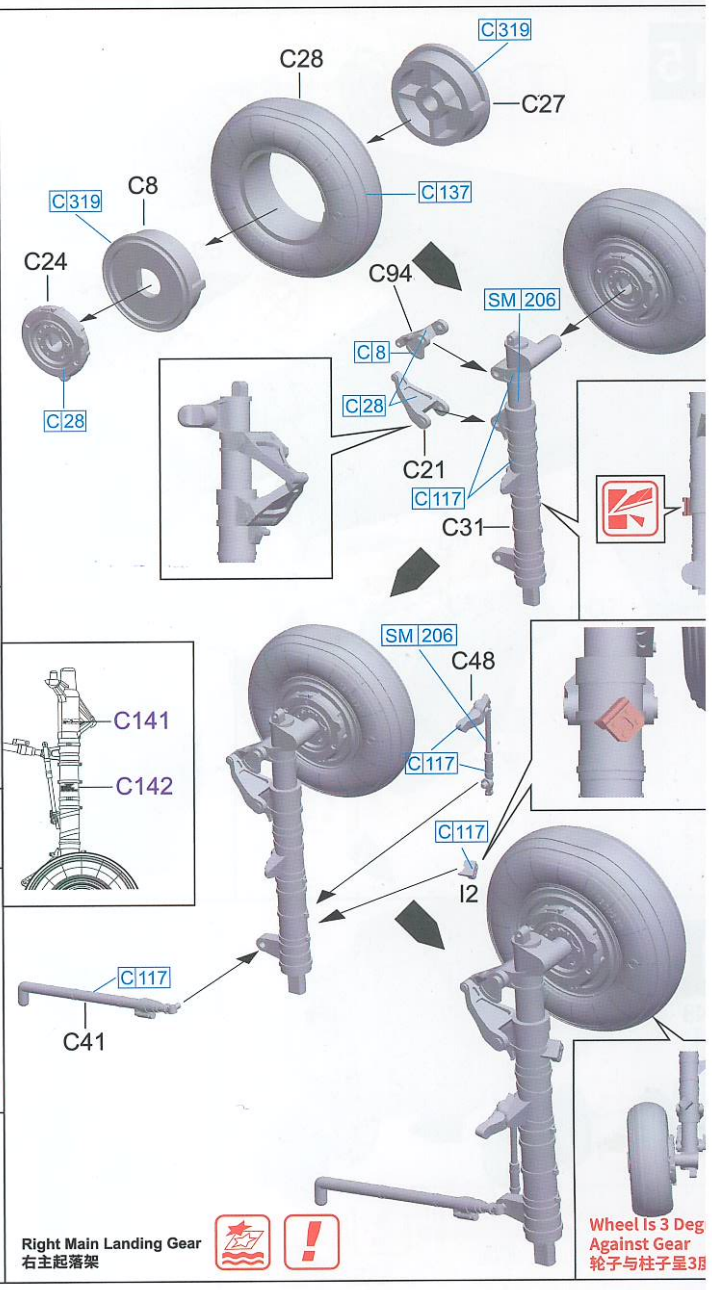
C319
C28
C27
C137
C8
C319
C24
C28
C94
SM 206
C8
C28
C21
C117
C31
C141
C142
SM 206
C48
C117
C117
I2
C117
C41
Right Main Landing Gear
右主起落架
Wheel Is 3 Deg
Against Gear
轮子与柱子呈3

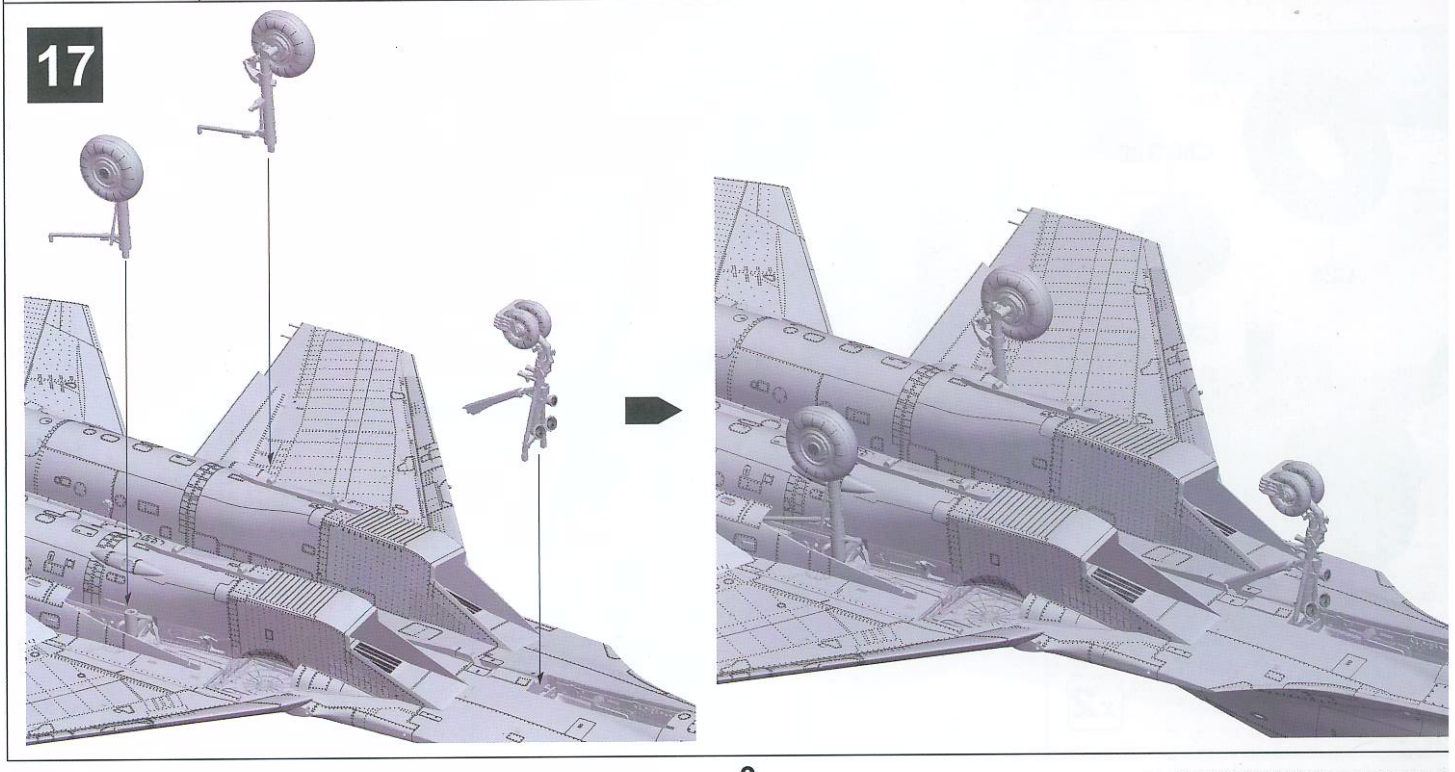
17

19

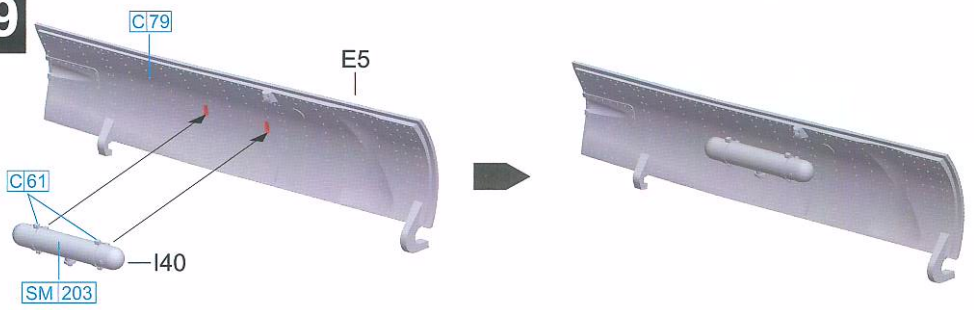

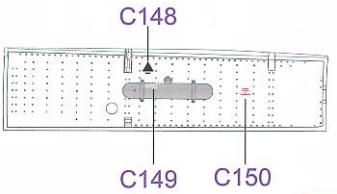

20

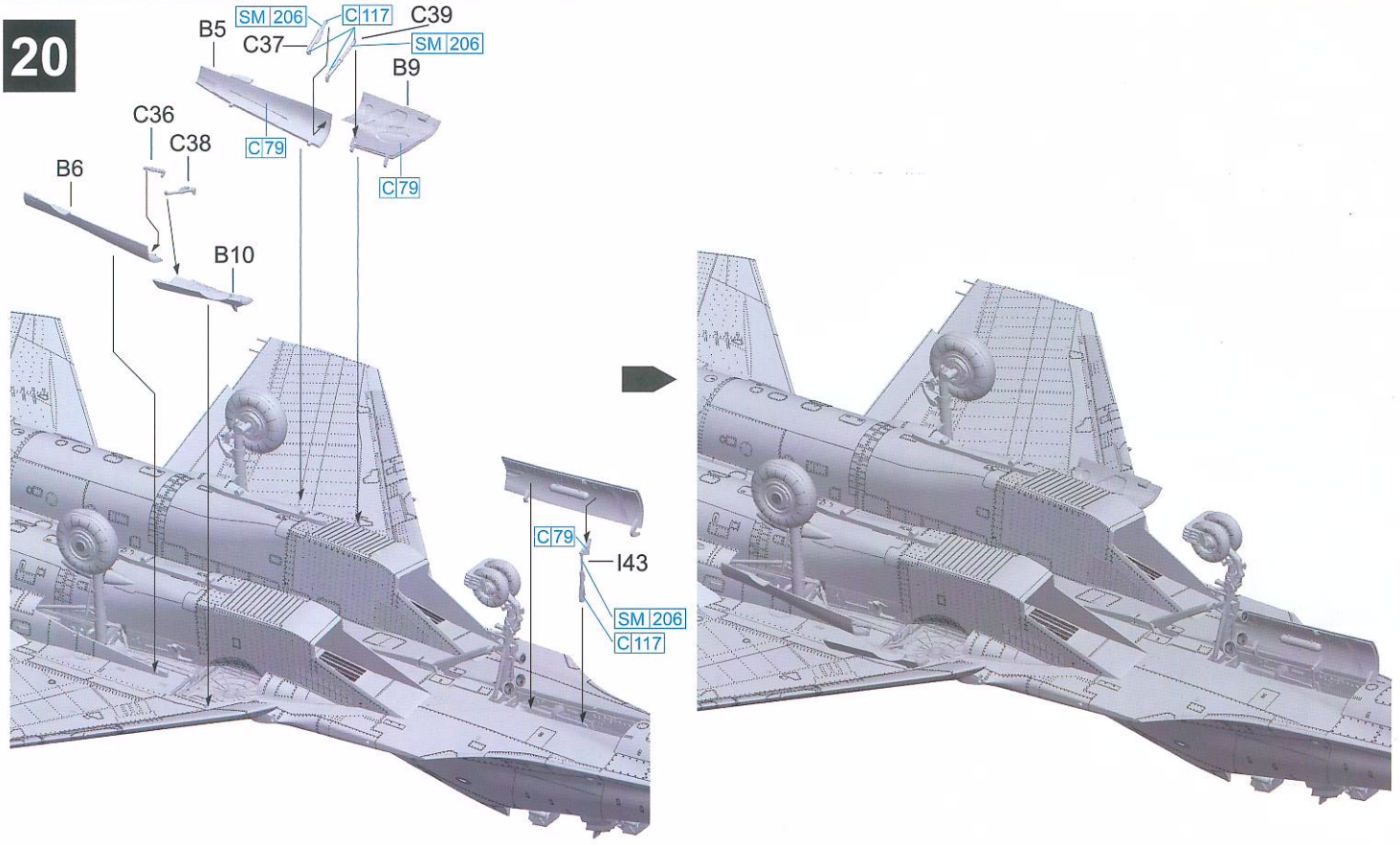

21

Be Sure To Refer P14-P18 To Decide Your Specific Ordance Before Making
请务必参照第14至18页决定具体挂载方案后再进行制作

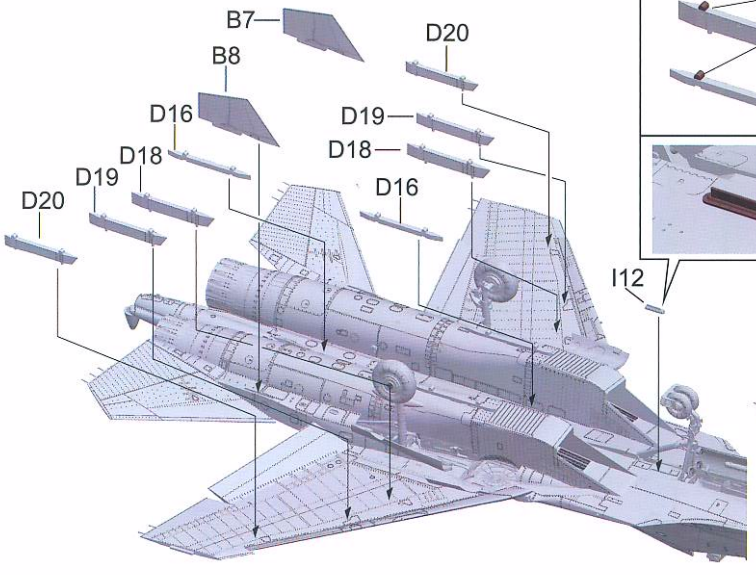

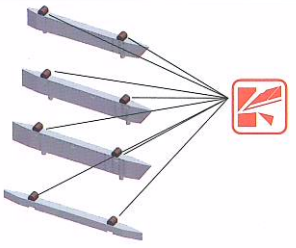

Cut The Shadowed Area If Using BD3-USK Pylons
若使用BD3-USK挂架，则需切除转换梁上的凸起

No Need To Use D18/D19 Transfer Beams If Use Twin Launcher Transfer Beams
若使用双联装过渡梁，则无需使用D18/D19

No Need To Use D16 If use AKU-170 Pylons (adhere on lower fuselage center hardpoints directly)
若使用AKU-170挂架，则无需使用D16（直接安装在下机身中线位置）

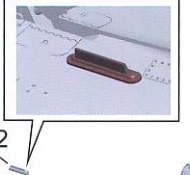

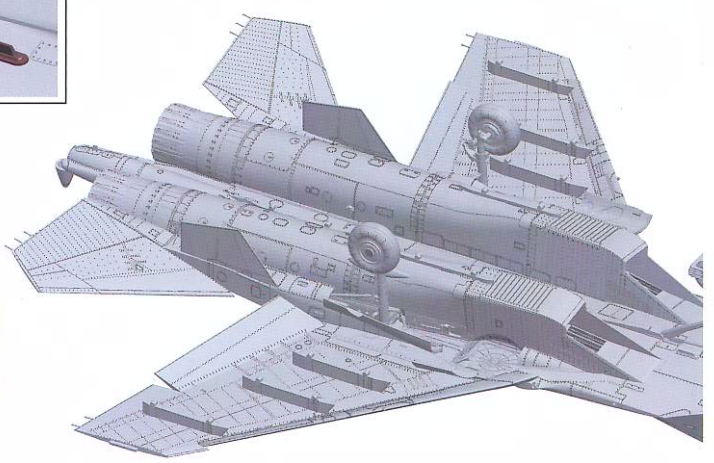

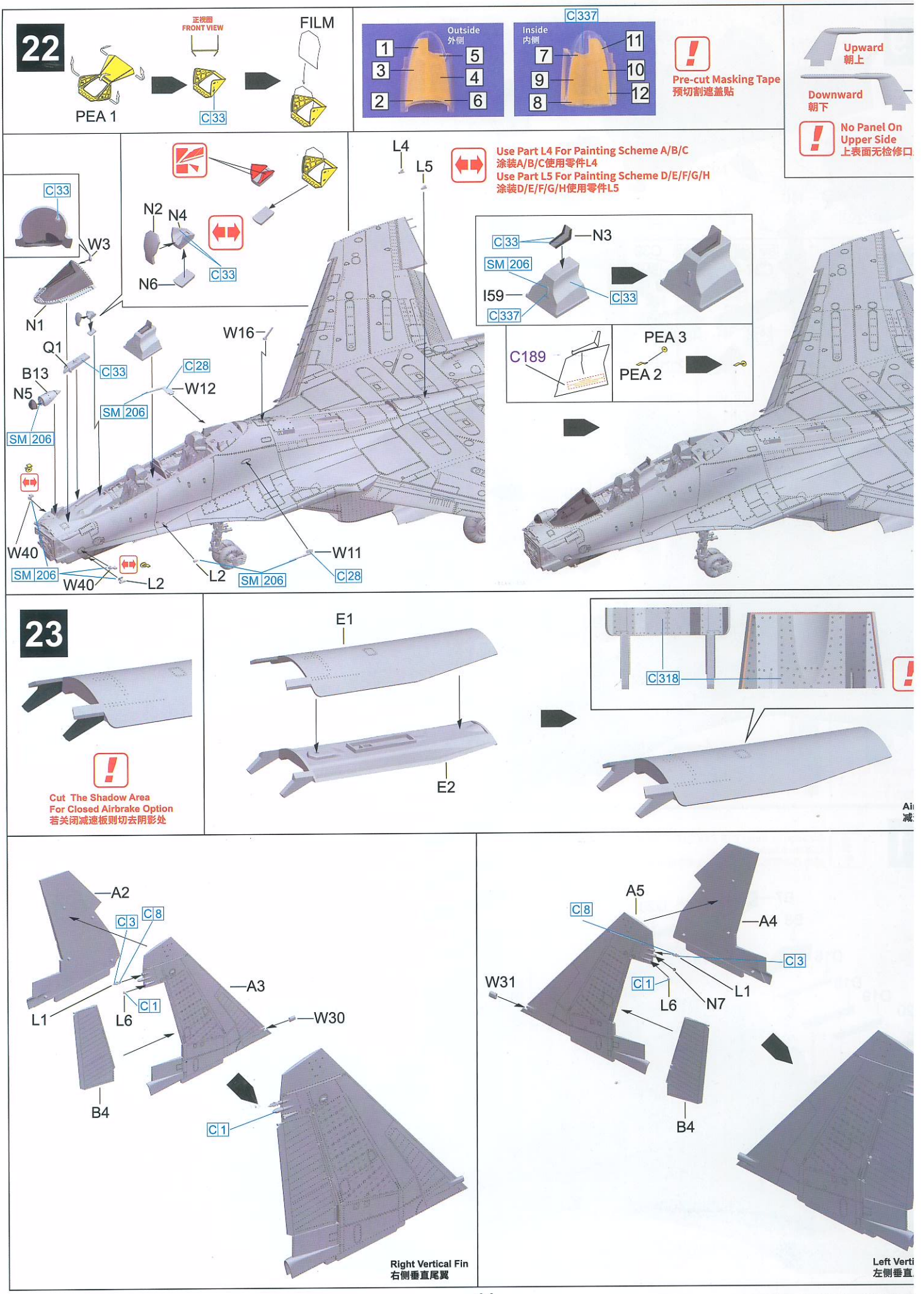
22
正视图
FRONT VIEW
FILM
PEA 1
C33
Outside
外侧
Inside
内侧
C337
1
2
3
4
5
6
7
8
9
10
11
12
Pre-cut Masking Tape
预切割遮盖贴
Upward
朝上
Downward
朝下
No Panel On
Upper Side
上表面无检修口
Use Part L4 For Painting Scheme A/B/C
涂装A/B/C使用零件L4
Use Part L5 For Painting Scheme D/E/F/G/H
涂装D/E/F/G/H使用零件L5
L4
L5
N2
N4
N6
W3
N1
Q1
B13
N5
SM 206
C28
W12
W16
W40
L2
W11
N3
I59
C189
PEA 3
PEA 2
23
Cut The Shadow Area
For Closed Airbrake Option
若关闭减速板则切去阴影处
E1
E2
C318
A2
C3
C8
A3
C1
L1
L6
W30
B4
Right Vertical Fin
右侧垂直尾翼
A5
A4
W31
N7
Left Verti
左侧垂直

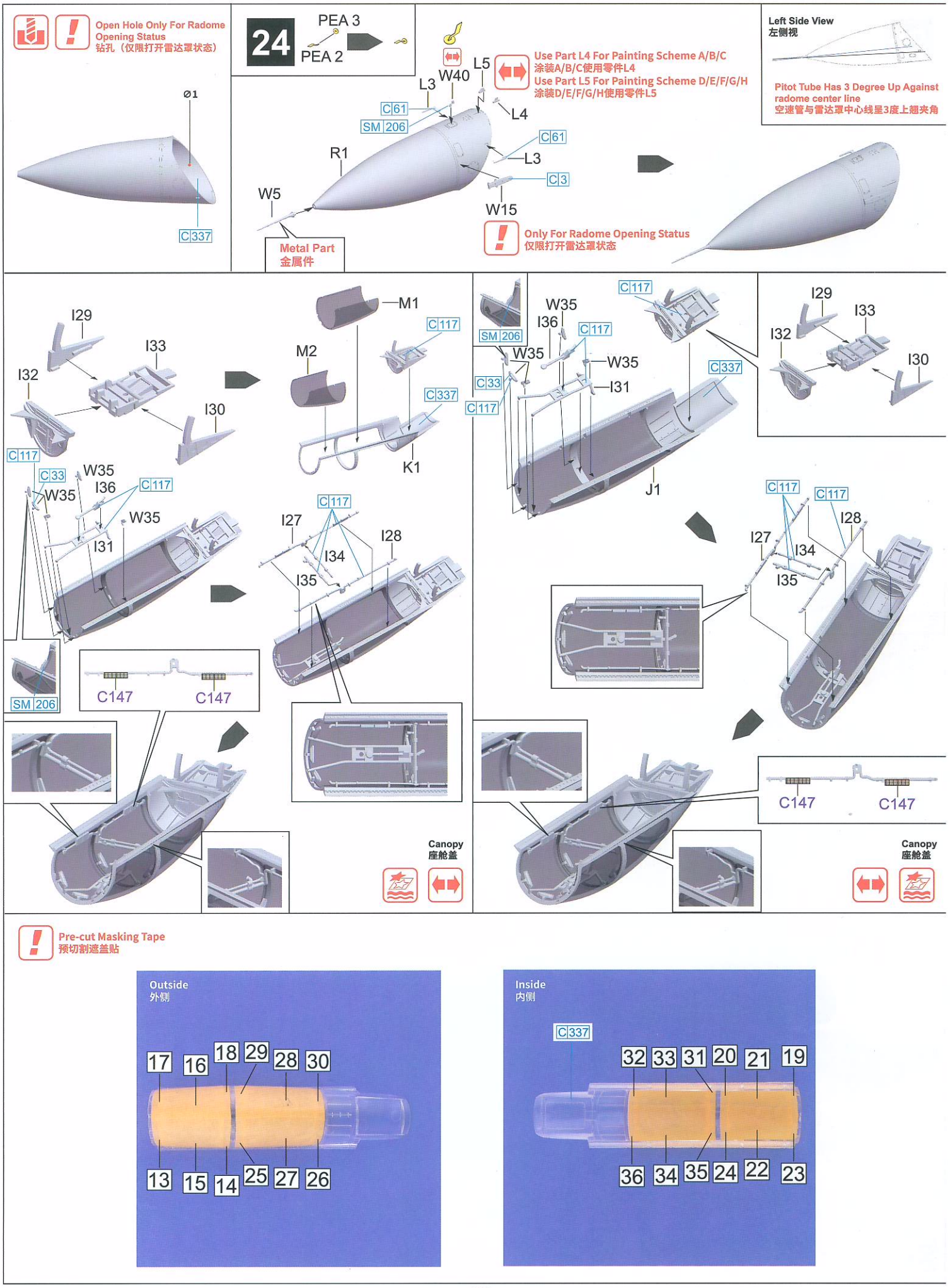
Open Hole Only For Radome Opening Status
钻孔（仅限打开雷达罩状态）
Ø1
C337
24
PEA 3
PEA 2
W40
L5
L3
L4
C61
SM 206
R1
W5
W15
C3
Metal Part
金属件
Use Part L4 For Painting Scheme A/B/C
涂装A/B/C使用零件L4
Use Part L5 For Painting Scheme D/E/F/G/H
涂装D/E/F/G/H使用零件L5
Only For Radome Opening Status
仅限打开雷达罩状态
Left Side View
左侧视
Pitot Tube Has 3 Degree Up Against radome center line
空速管与雷达罩中心线呈3度上翘夹角
I29
I33
I32
I30
M1
M2
C117
K1
C33
W35
I36
I31
J1
I27
I28
I34
I35
C147
Canopy
座舱盖
Pre-cut Masking Tape
预切割遮盖贴
Outside
外侧
17
16
18
29
28
30
13
15
14
25
27
26
Inside
内侧
32
33
31
20
21
19
36
34
35
24
22
23

25

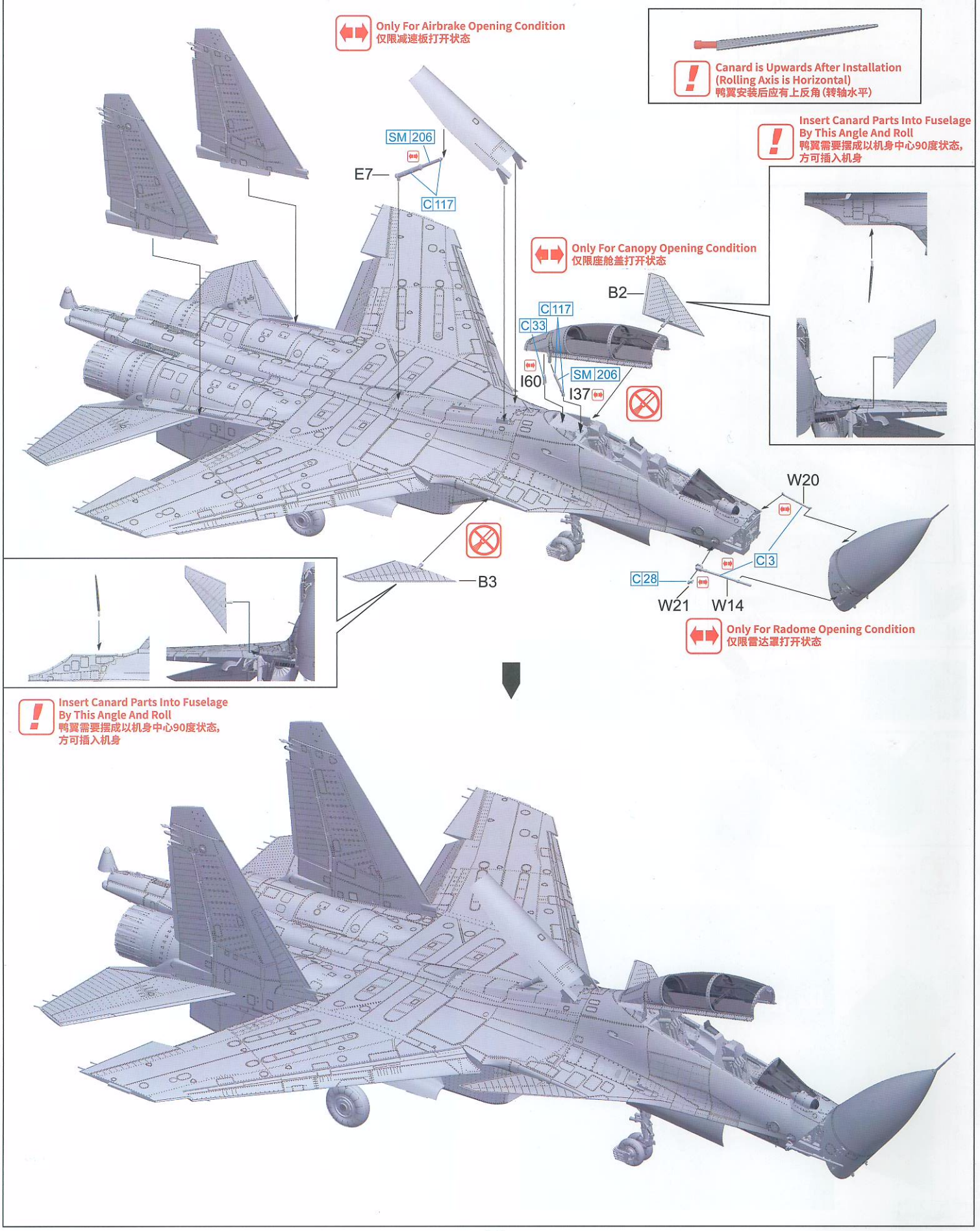
Only For Airbrake Opening Condition
仅限减速板打开状态
Canard is Upwards After Installation
(Rolling Axis is Horizontal)
鸭翼安装后应有上反角(转轴水平)
Insert Canard Parts Into Fuselage
By This Angle And Roll
鸭翼需要摆成以机身中心90度状态,
方可插入机身
SM 206
E7
C 117
Only For Canopy Opening Condition
仅限座舱盖打开状态
B2
C 117
C 33
I60
SM 206
I37
W20
C 3
C 28
W21
W14
B3
Only For Radome Opening Condition
仅限雷达罩打开状态
Insert Canard Parts Into Fuselage
By This Angle And Roll
鸭翼需要摆成以机身中心90度状态,
方可插入机身

26 Weapon Ordance 武器挂载

Cut Some Details On Weapon Surface To Install Pylons Dry Fit Befoe Gluing
武器表面一些细节需要切除才可安装挂架粘合前请务必假组

Be Sure To Refer P17 & P18 To Decide Your Specific Ordance Before Making
请务必参照第17和第18页决定具体挂载方案后再进行制作

A R-73 "AA-11" AA Missile + P-72 Pylon
R-73 "AA-11" 空空导弹 + P-72 挂架

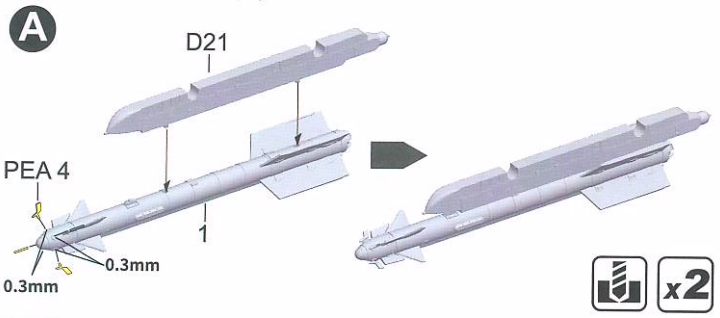

x2

B-8M1 Launcher
B-8M1 火箭巢

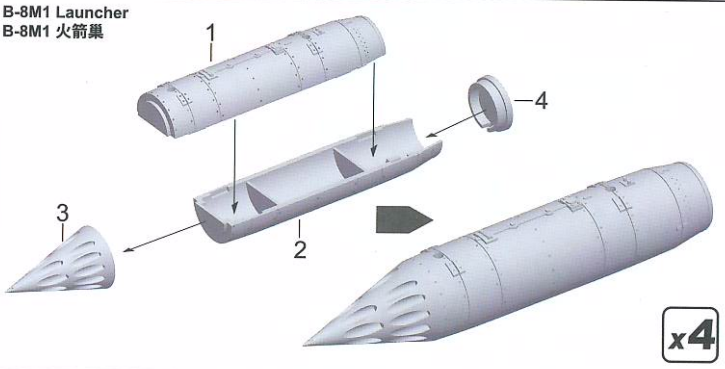

x4

B B-8M1 Launcher + BD3-USK-A Pylon(Single)
B-8M1 火箭巢 + BD3-USK-A 挂架(单发)

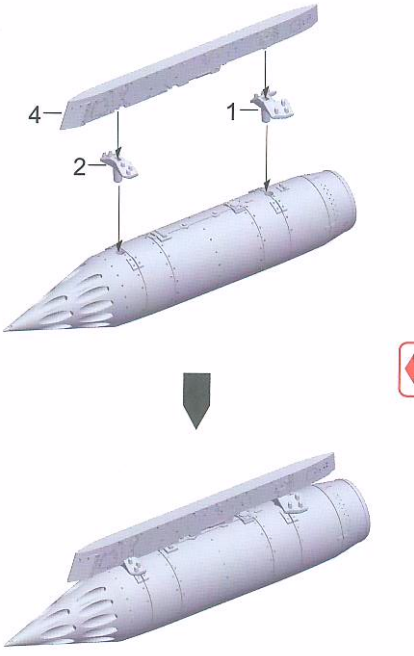

x2

C B-8M1 Launcher + BD3-USK-A Pylon(Twin)
B-8M1 火箭巢 + BD3-USK-A 挂架(双联)

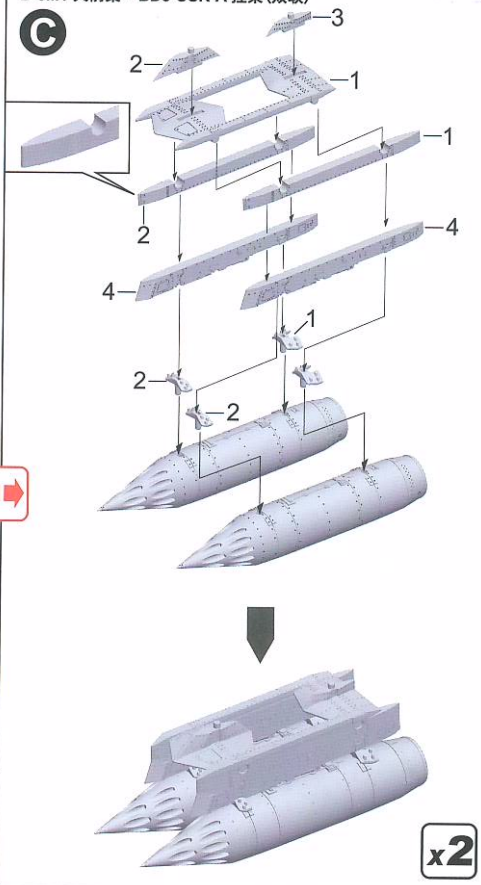

x2

D KAB-500L Laser Guide Bomb + BD3-USK-A Pylon
KAB-500L 激光制导炸弹 + BD3-USK-A 挂架

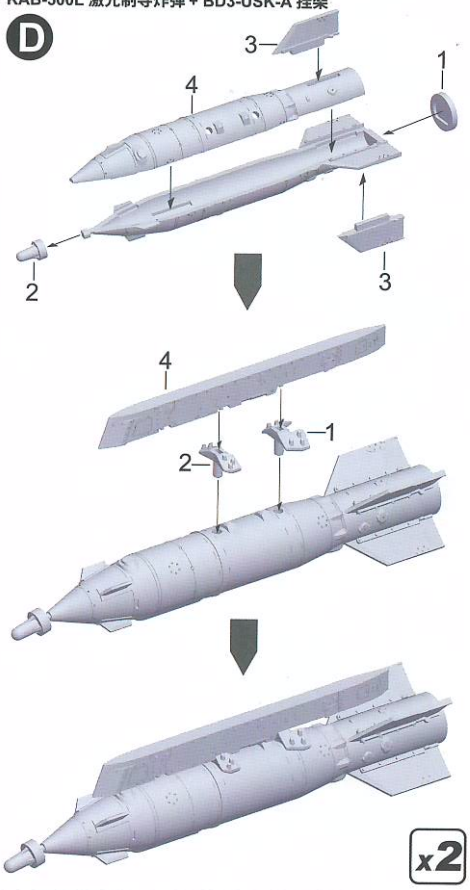

x2

E Kh-59M AG Missile + AKU-58 Pylon
Kh-59M 空面导弹 + AKU-58 挂架

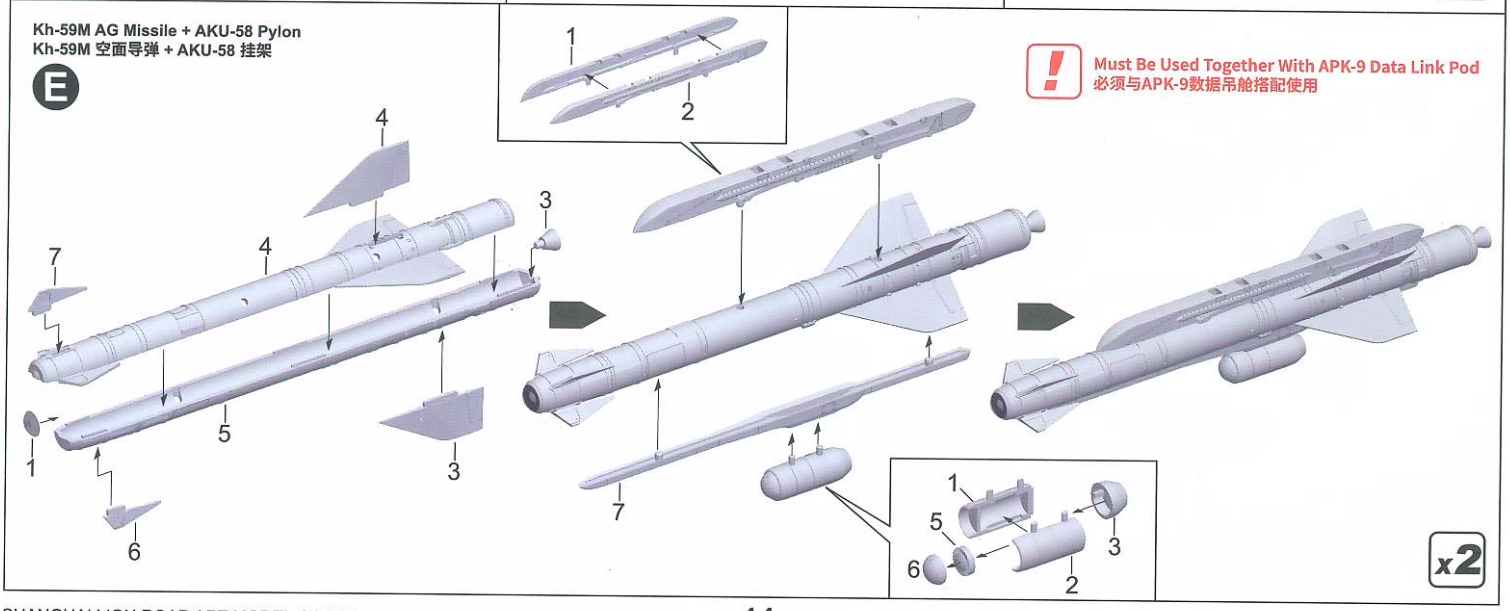

Must Be Used Together With APK-9 Data Link Pod
必须与APK-9数据吊舱搭配使用

x2

KAB-500Kr TV Guide Bomb + BD3-USK-A Pylon
KAB-500Kr 电视制导炸弹 + BD3-USK-A 挂架

F

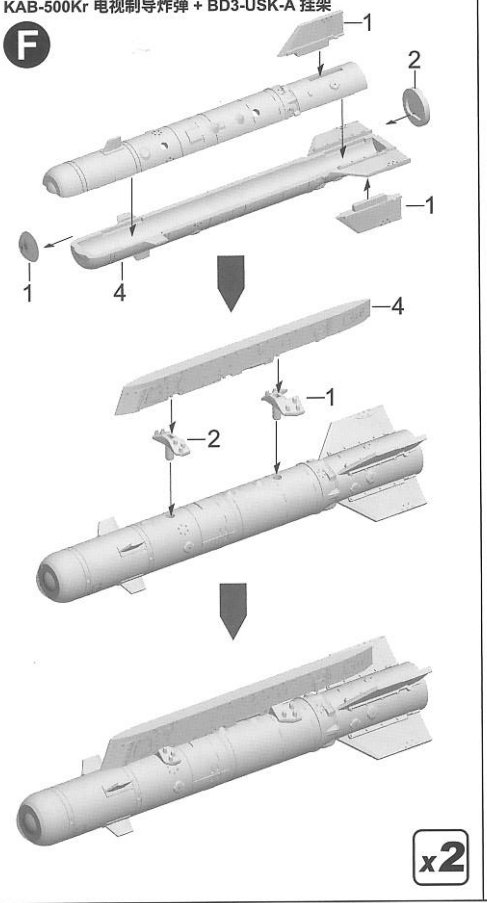

FAB-500M-62 Bomb + BD3-USK-A Pylon
FAB-500M-62 炸弹 + BD3-USK-A 挂架

G

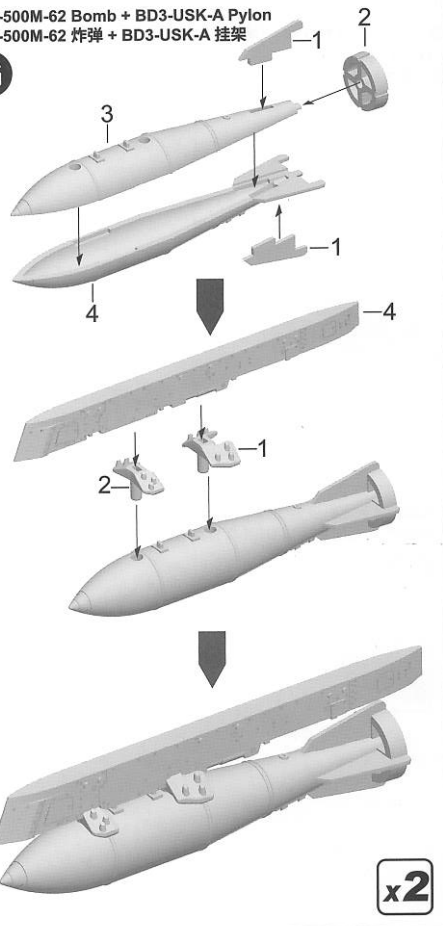

APK-9 Data Link Pod (Used With Kh-59M Missiles)
APK-9 数据链吊舱（与Kh-59M导弹搭配使用）

H

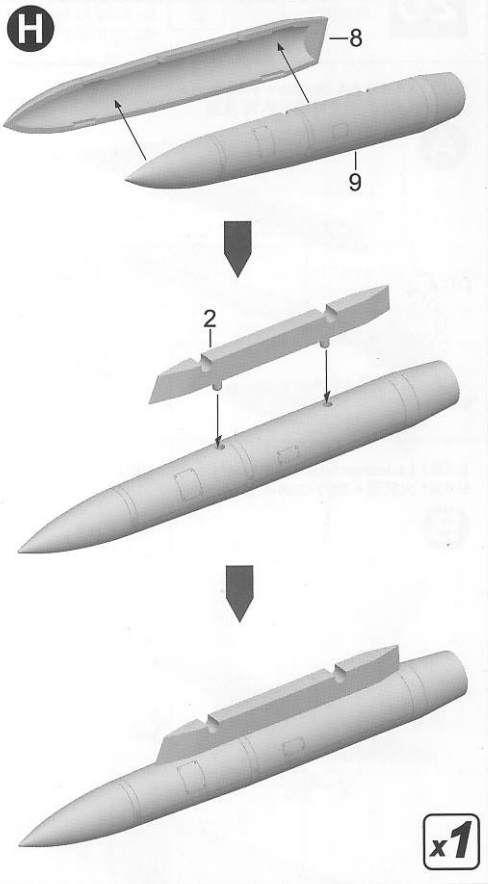

FAB-500M-54 Bomb + BD3-USK-A Pylon
FAB-500M-54 炸弹 + BD3-USK-A 挂架

I

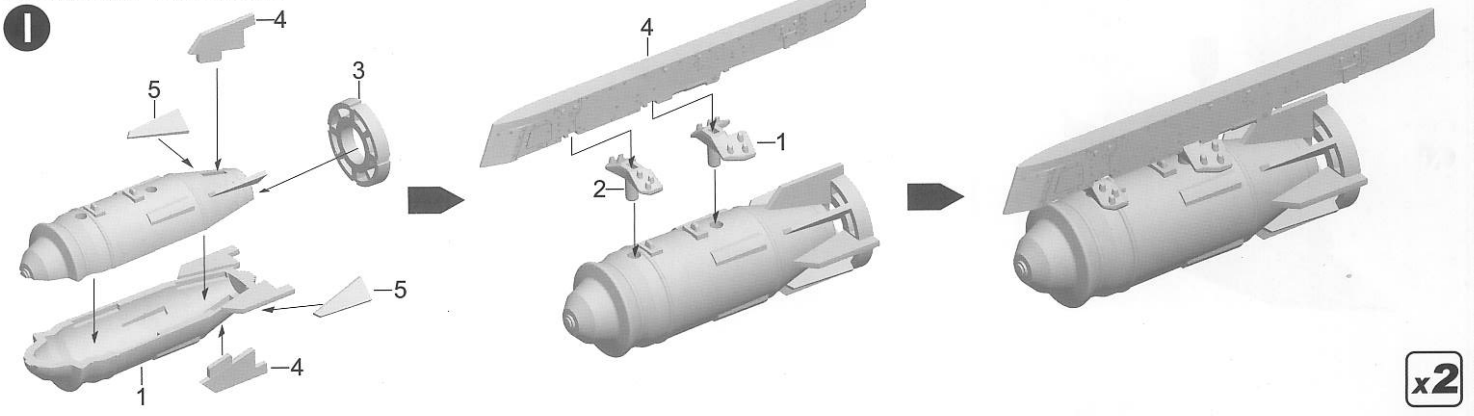

Kh-59MK AG Missile + AKU-58 Pylon
Kh-59MK 空面导弹 + AKU-58 挂架

J

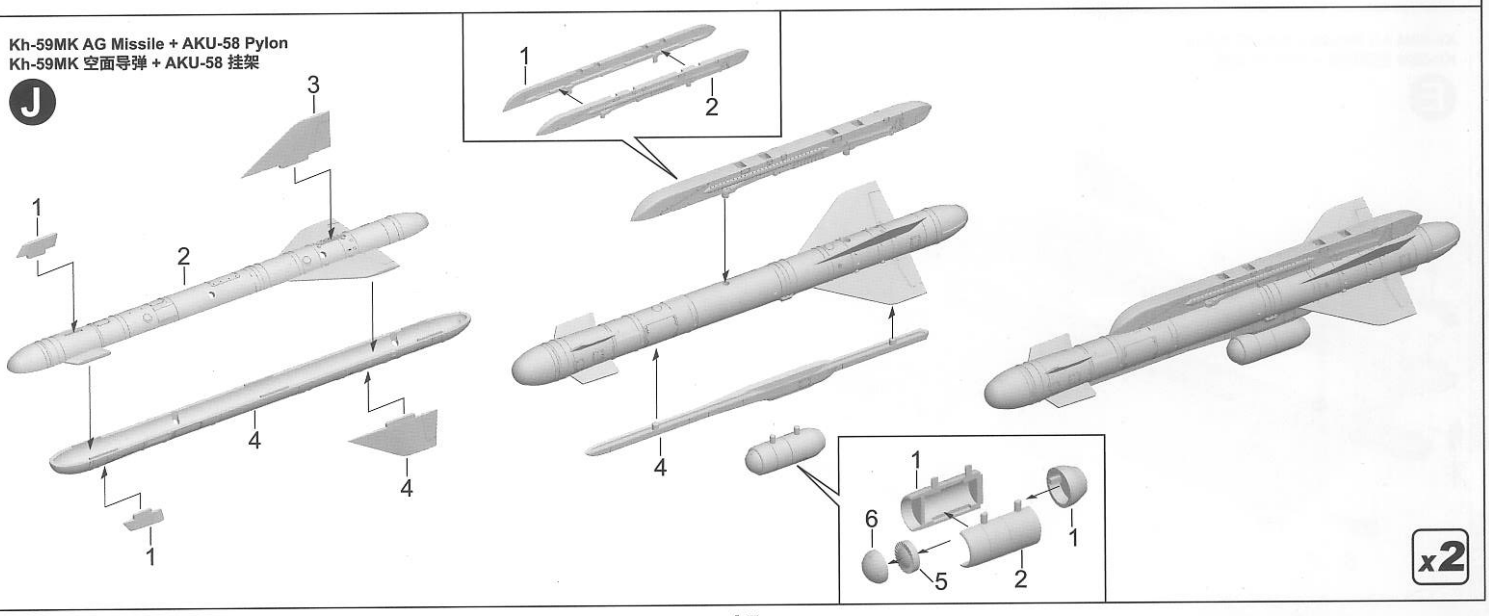

R-77 AA Missile + AKU-170 Pylon
R-77 空空导弹 + AKU-170 挂架

K

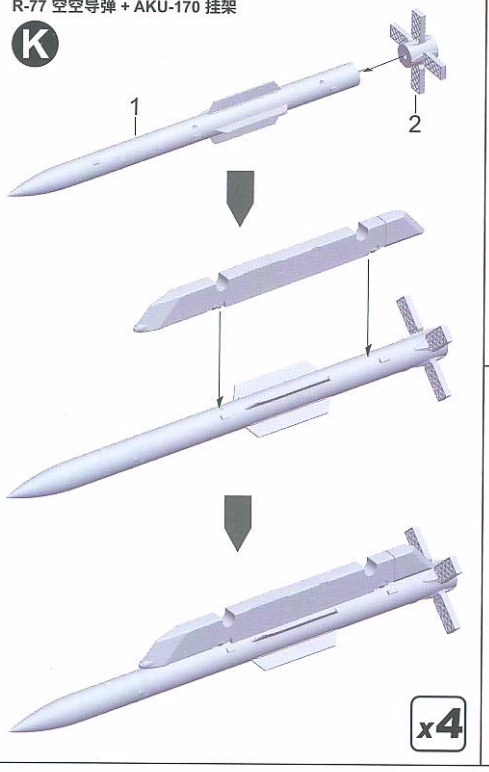

R-73 "AA-11" AA Missile + P-72 Pylon
R-73 "AA-11" 空空导弹 + P-72 挂架

L

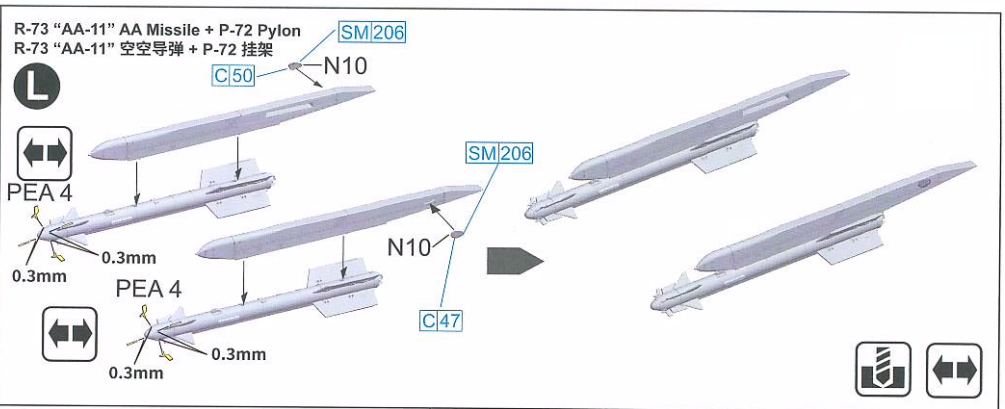

SAP-518 ECM Pod
SAP-518 电子战吊舱

M

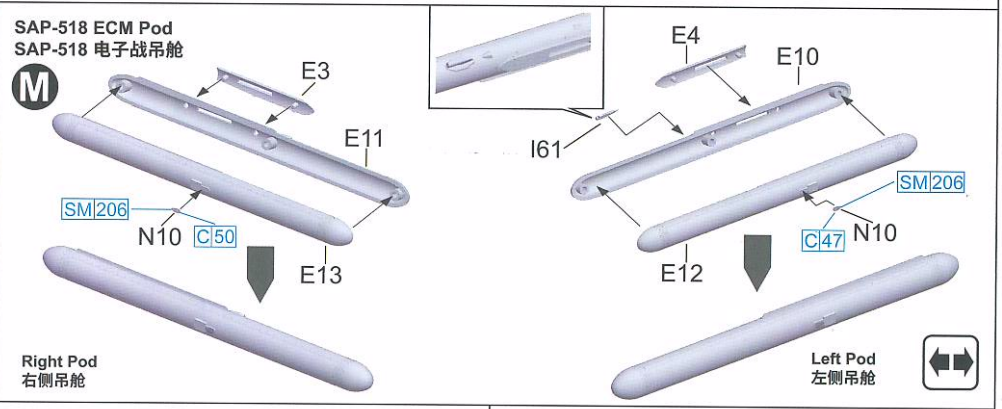

B-13L Launcher
B-13L 火箭巢

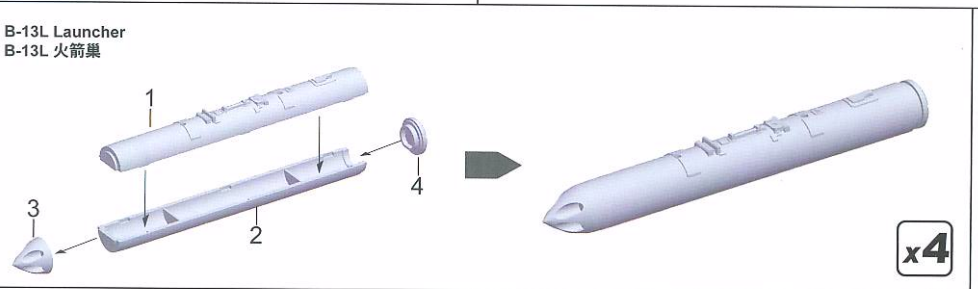

Kh-31AD AG Missile + AKU-58 Pylon
Kh-31AD 空面导弹 + AKU-58 挂架

P

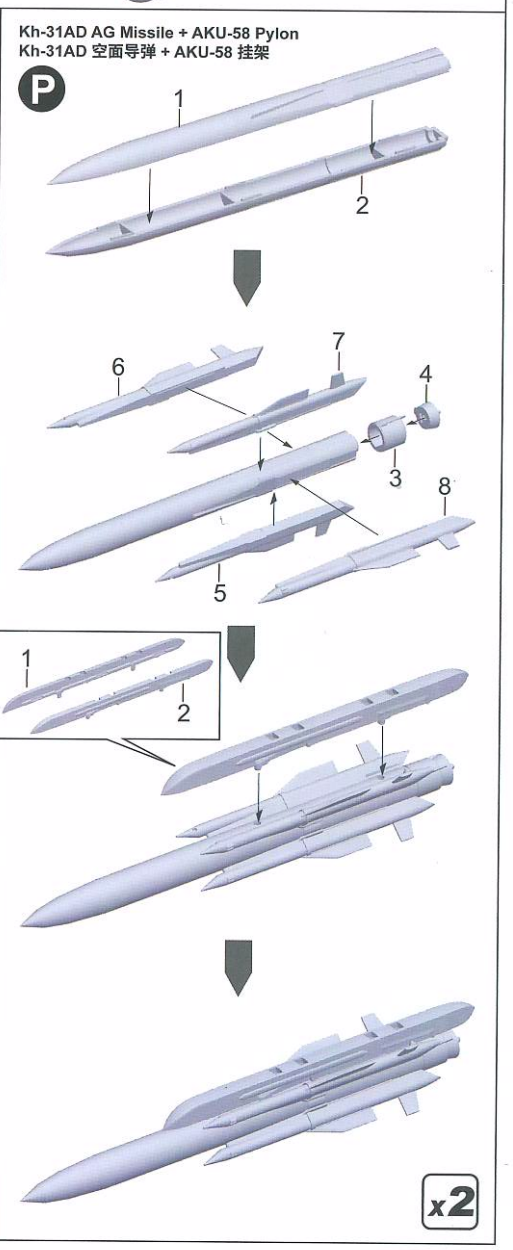

B-13L Launcher + BD3-USK-A Pylon(Single)
B-13L 火箭巢 + BD3-USK-A 挂架(单发)

N

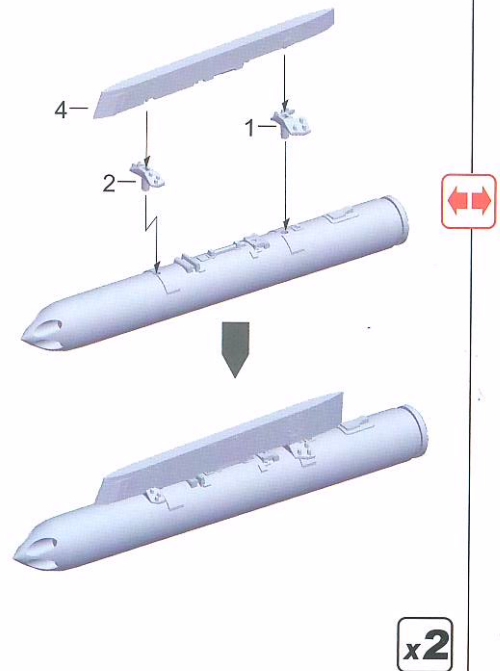

B-13L Launcher + BD3-USK-A Pylon(Twin)
B-13L 火箭巢 + BD3-USK-A 挂架(双联)

O

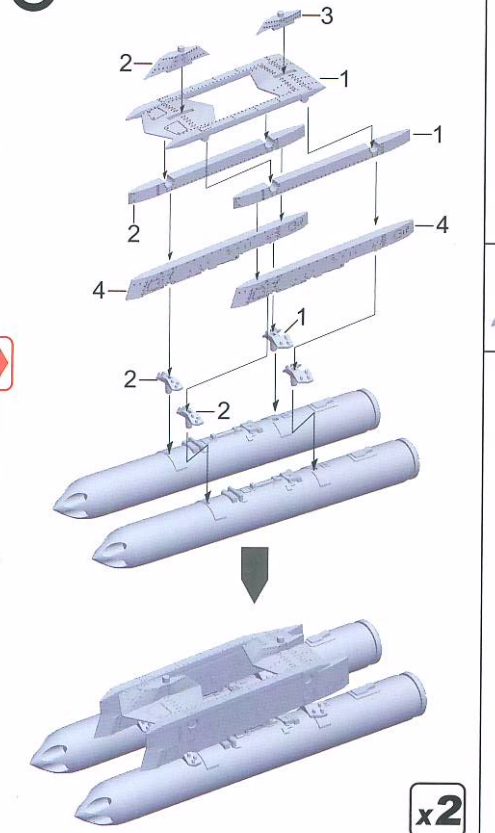

1
2
3
4
5
6
7
8
9
10
11
12

Weapon 武器	Hardpoint 挂点 1	2	3	4	5	6	7	8	9	10	11	12
	A	●	●	●					●	●	●	
	B		●	●					●	●		
	C		●	●					●	●		
	D		●	●	●	●	●	●	●	●		
use with H 搭配H使用	E		●	●		●	●		●	●		
	F		●	●	●	●	●	●	●	●		
	G		●	●	●	●	●	●	●	●		
use with E 搭配E使用	H				●			●				
	I		●	●	●	●	●	●	●	●		
	J		●	●		●	●	●		●		
	K	●	●	●	●	●	●	●	●	●	●	
	L	●										●
	M	●										●
	N		●	●					●	●		
	O		●	●					●	●		
	P		●	●	●	●	●	●	●	●		

28

AKU-58 Pylon
AKU-58 挂架

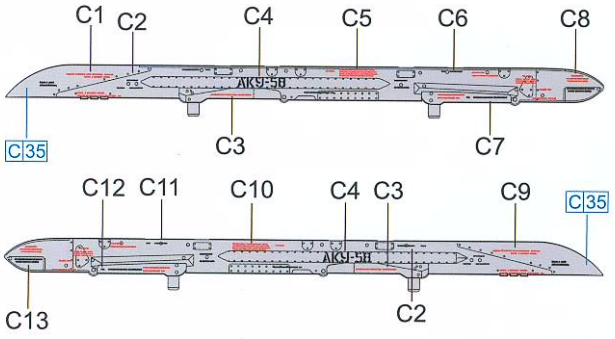

Adaptors
过渡梁

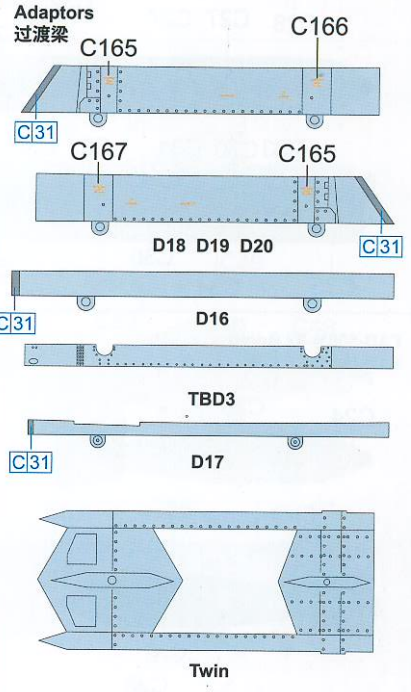

BD3-USK-A Pylon
BD3-USK-A 挂架

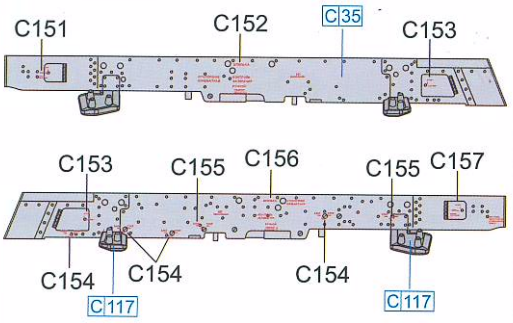

AKU-170 Pylon
AKU-170 挂架

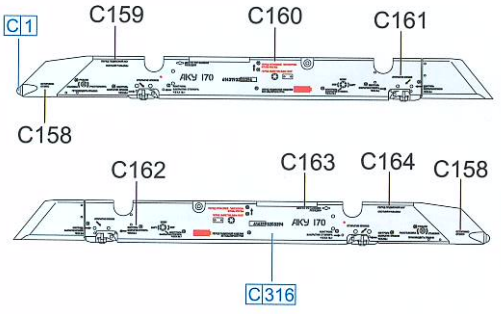

Painting Scheme 涂装A/B/C/D/E/H
50% C323 +30% C1 +20% C73
Painting Scheme 涂装F C323
Painting Scheme 涂装G C20

P-72 Pylon
P-72 挂架

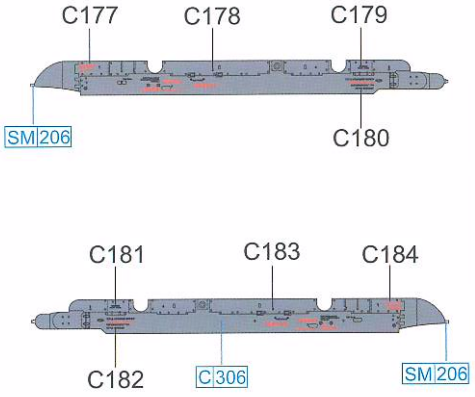

SAP-518 ECM Pod
SAP-518 电子战吊舱

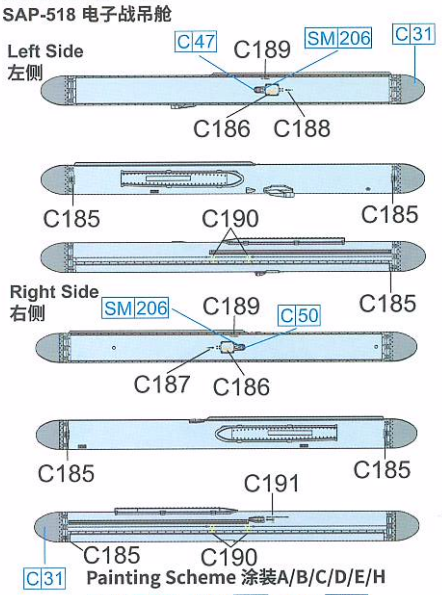

Painting Scheme 涂装A/B/C/D/E/H
50% C323 +30% C1 +20% C73
Painting Scheme 涂装F C323
Painting Scheme 涂装G C20

P-72 Wingtip Pylon
P-72 翼尖挂架

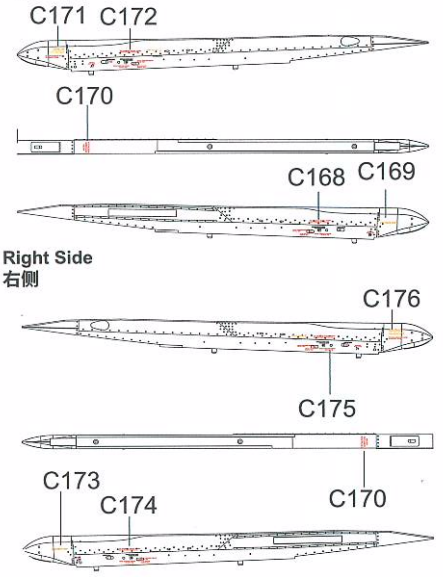

APK-9 Data Link Pod (Used With Kh-59M Missiles)
APK-9 数据链吊舱(与Kh-59M导弹搭配使用)

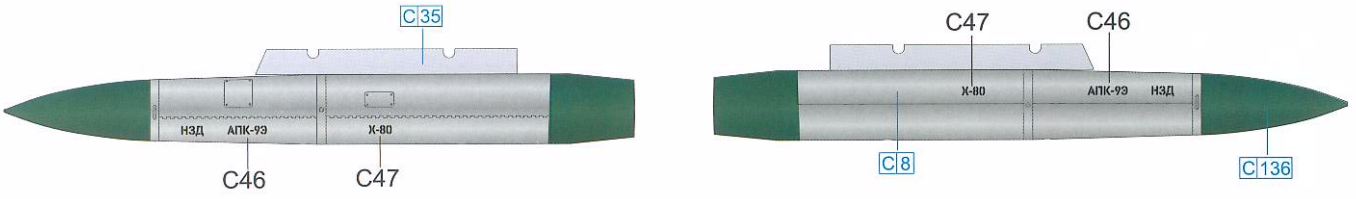

B-13L Launcher
B-13L 火箭巢

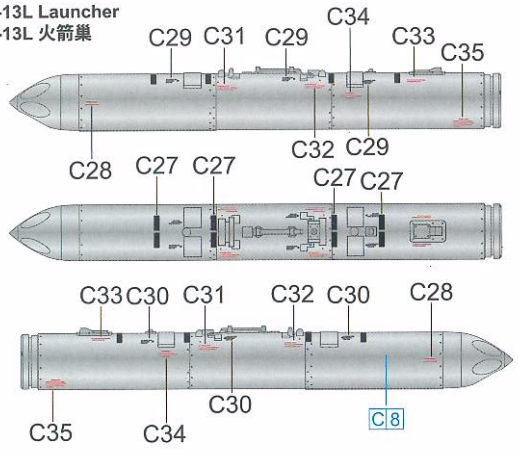

B-8M1 Launcher
B-8M1 火箭巢

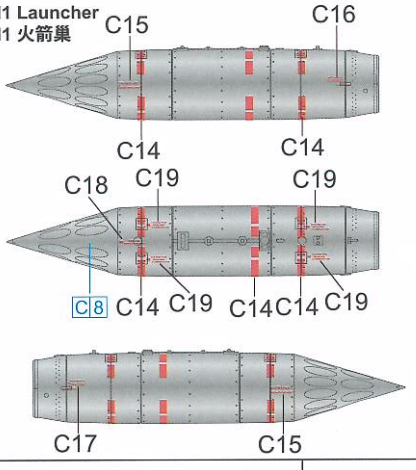

FAB-500M-54 Bomb
FAB-500M-54 炸弹

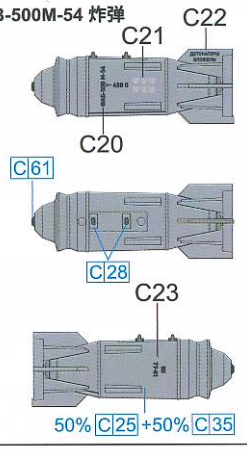

FAB-500M-62 Bomb
FAB-500M-62 炸弹

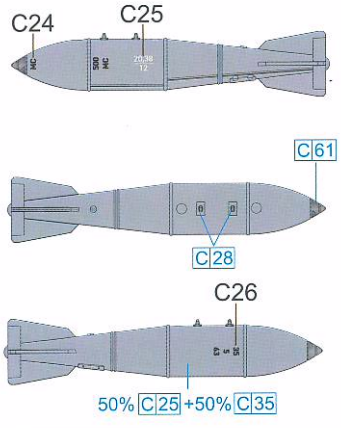

R-77 AA Missile
R-77 空空导弹

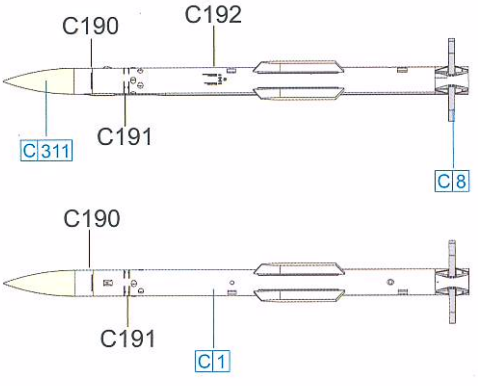

R-73 AA Missile
R-73 空空导弹

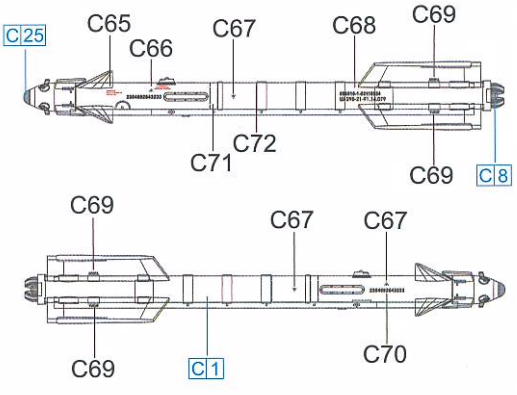

KAB-500Kr TV Guide Bomb
KAB-500Kr 电视制导炸弹

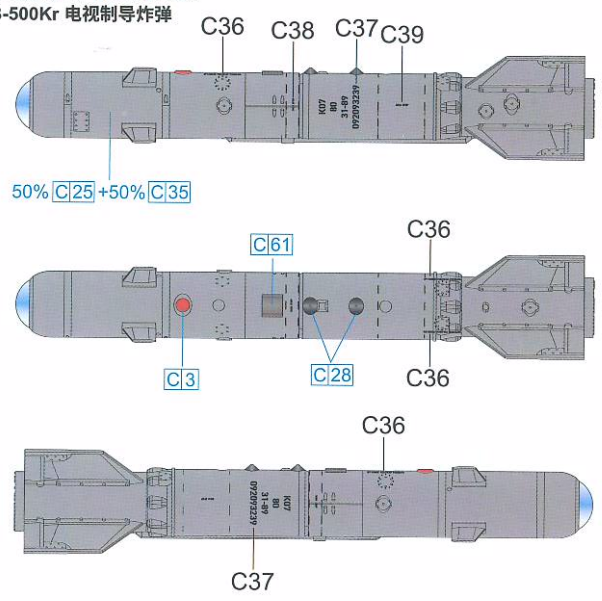

KAB-500L Laser Guide Bomb
KAB-500L 激光制导炸弹

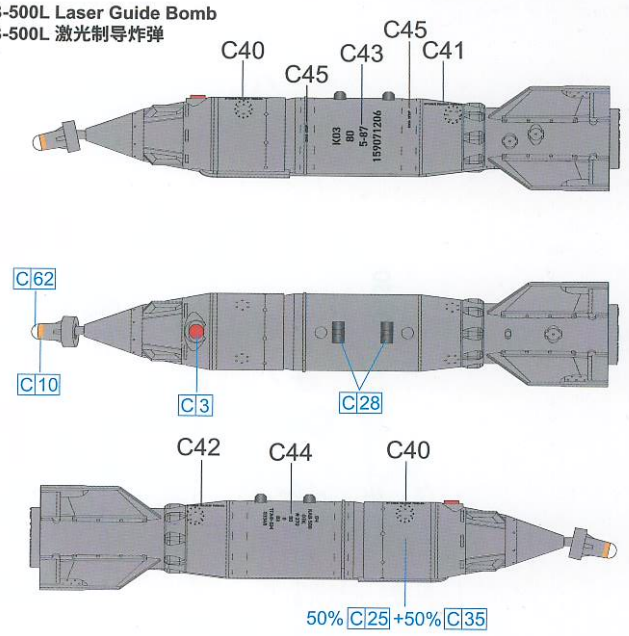

Kh-31AD AG Missile
Kh-31AD 空面导弹

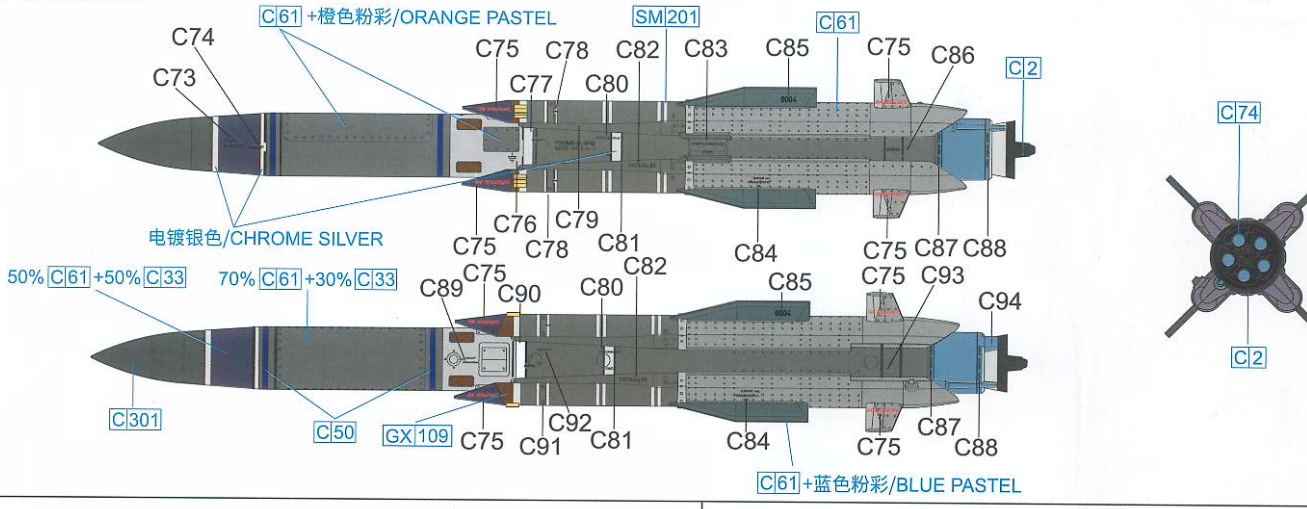

Kh-59MK AG Missile
Kh-59MK 空面导弹

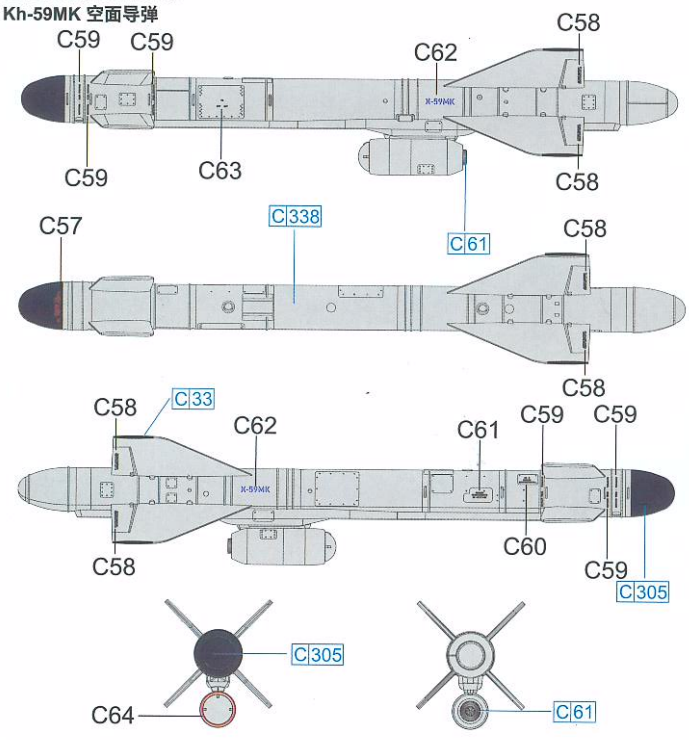

Kh-59M AG Missile
Kh-59M 空面导弹

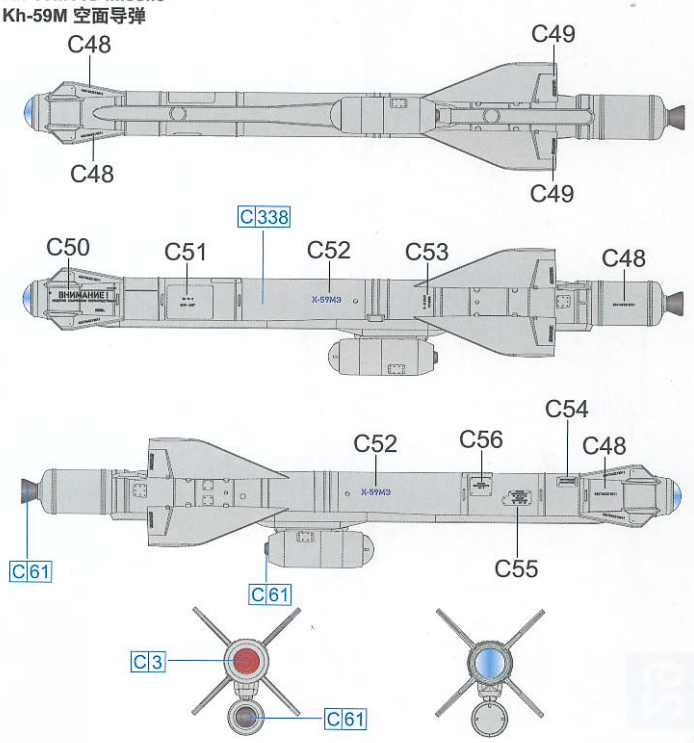

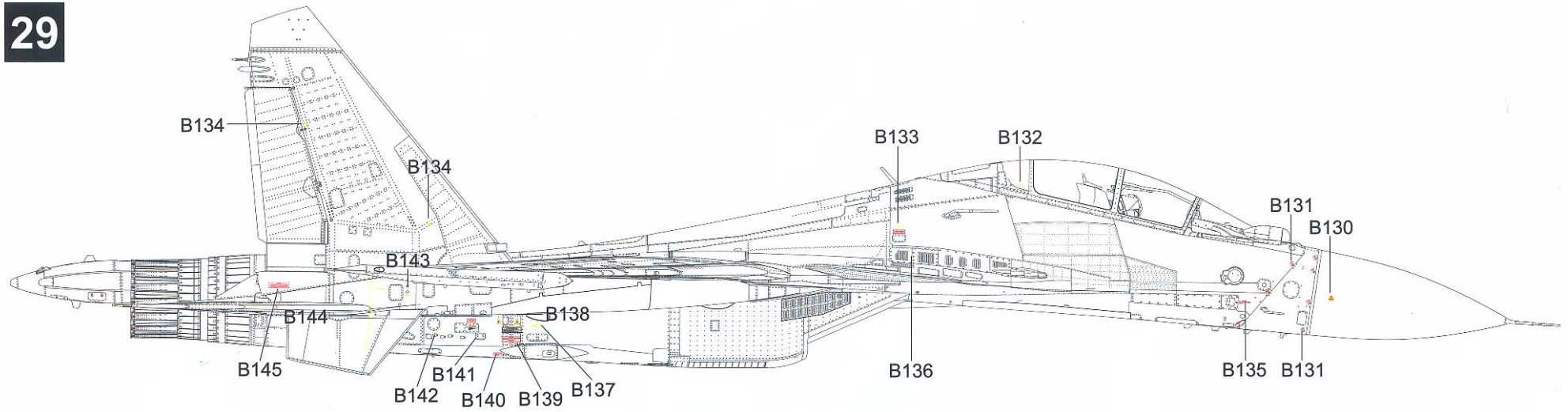
B134
B134
B133
B132
B131
B130
B143
B144
B138
B145
B142
B141
B140
B139
B137
B136
B135
B131

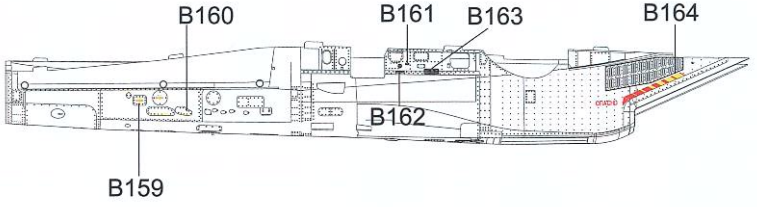
B160
B161
B163
B164
B162
B159

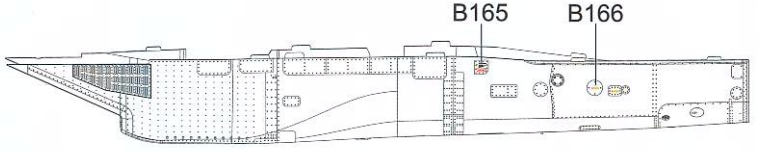
B165
B166

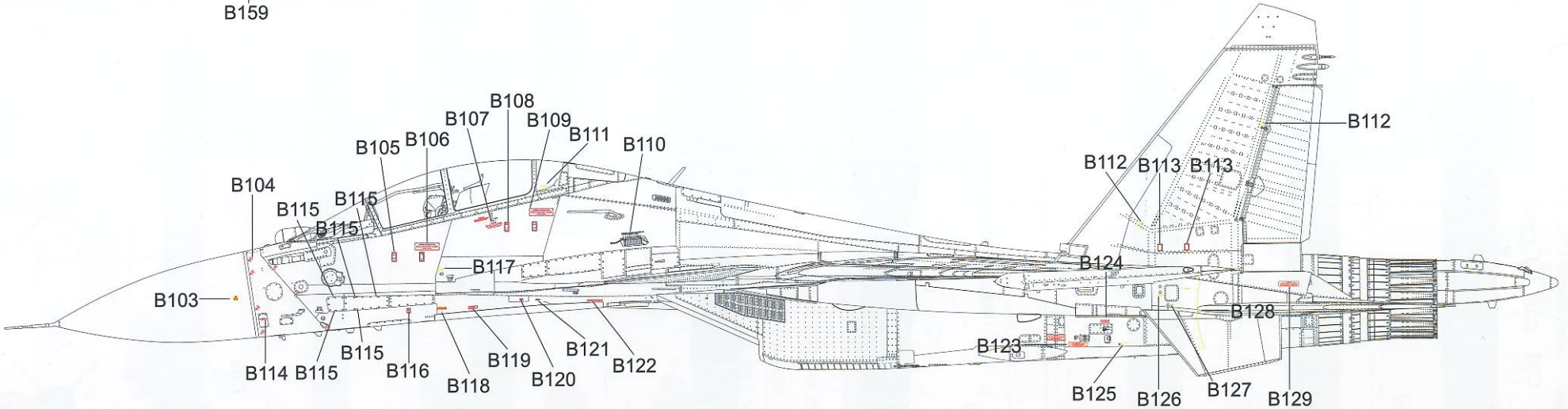
B108
B107
B109
B111
B110
B105
B106
B104
B115
B115
B115
B117
B103
B114
B115
B115
B116
B118
B119
B120
B121
B122
B112
B112
B113
B113
B124
B128
B123
B125
B126
B127
B129

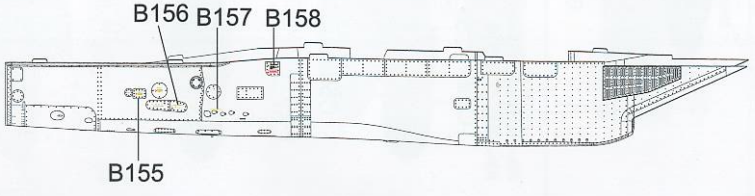
B156
B157
B158
B155

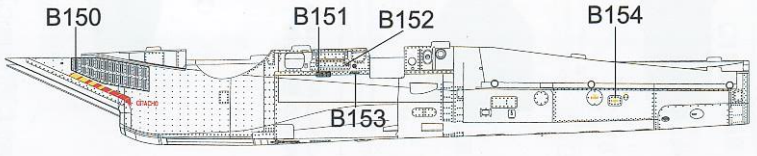
B150
B151
B152
B154
B153

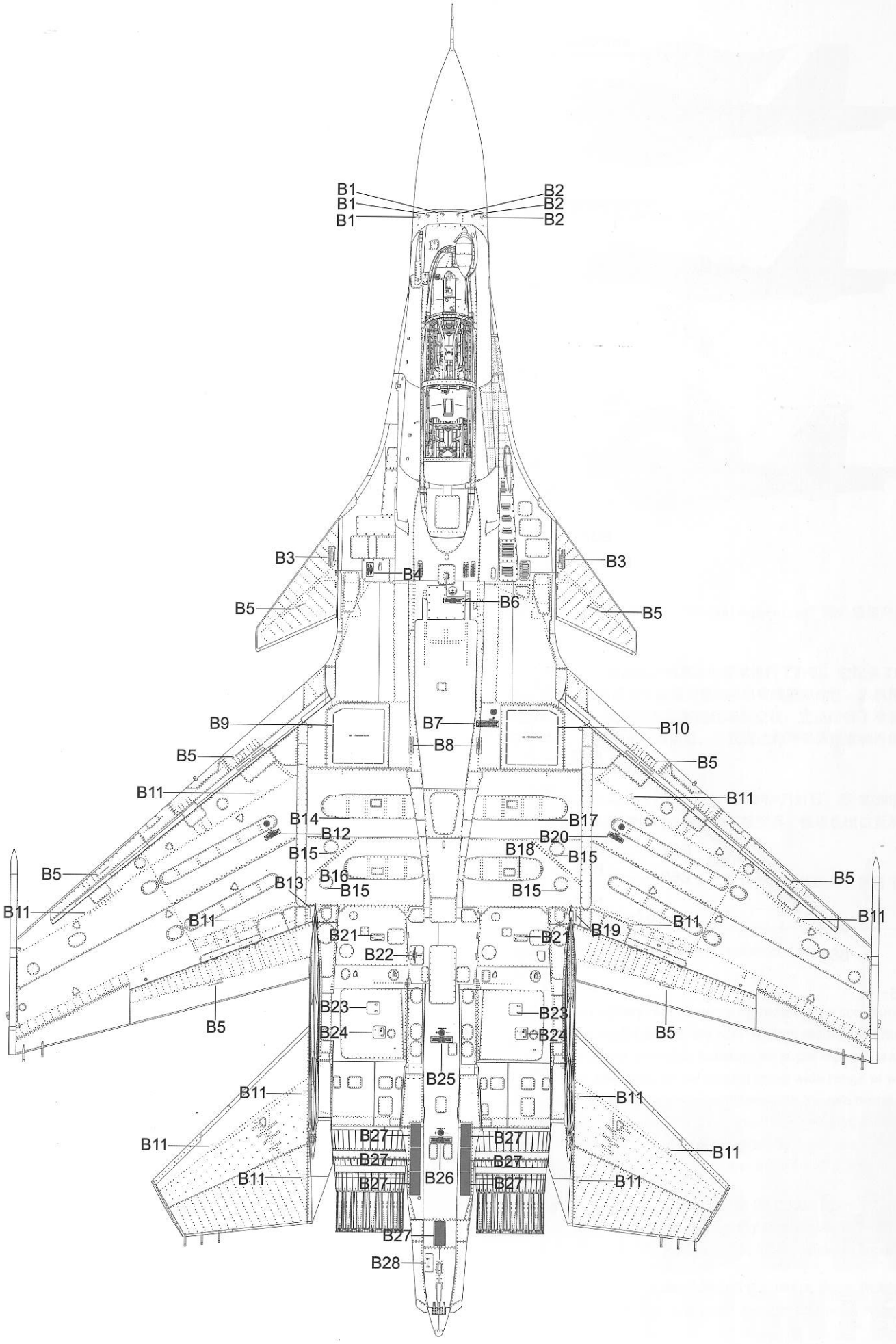
B1
B1
B1
B2
B2
B2
B3
B3
B3
B4
B5
B5
B5
B6
B7
B8
B9
B10
B5
B5
B11
B11
B11
B11
B14
B12
B15
B17
B20
B18
B15
B15
B5
B5
B13
B16
B15
B15
B11
B11
B11
B11
B19
B21
B21
B22
B23
B23
B24
B24
B5
B5
B25
B11
B11
B11
B11
B27
B27
B27
B27
B11
B11
B26
B27
B27
B27
B11
B11
B27
B28

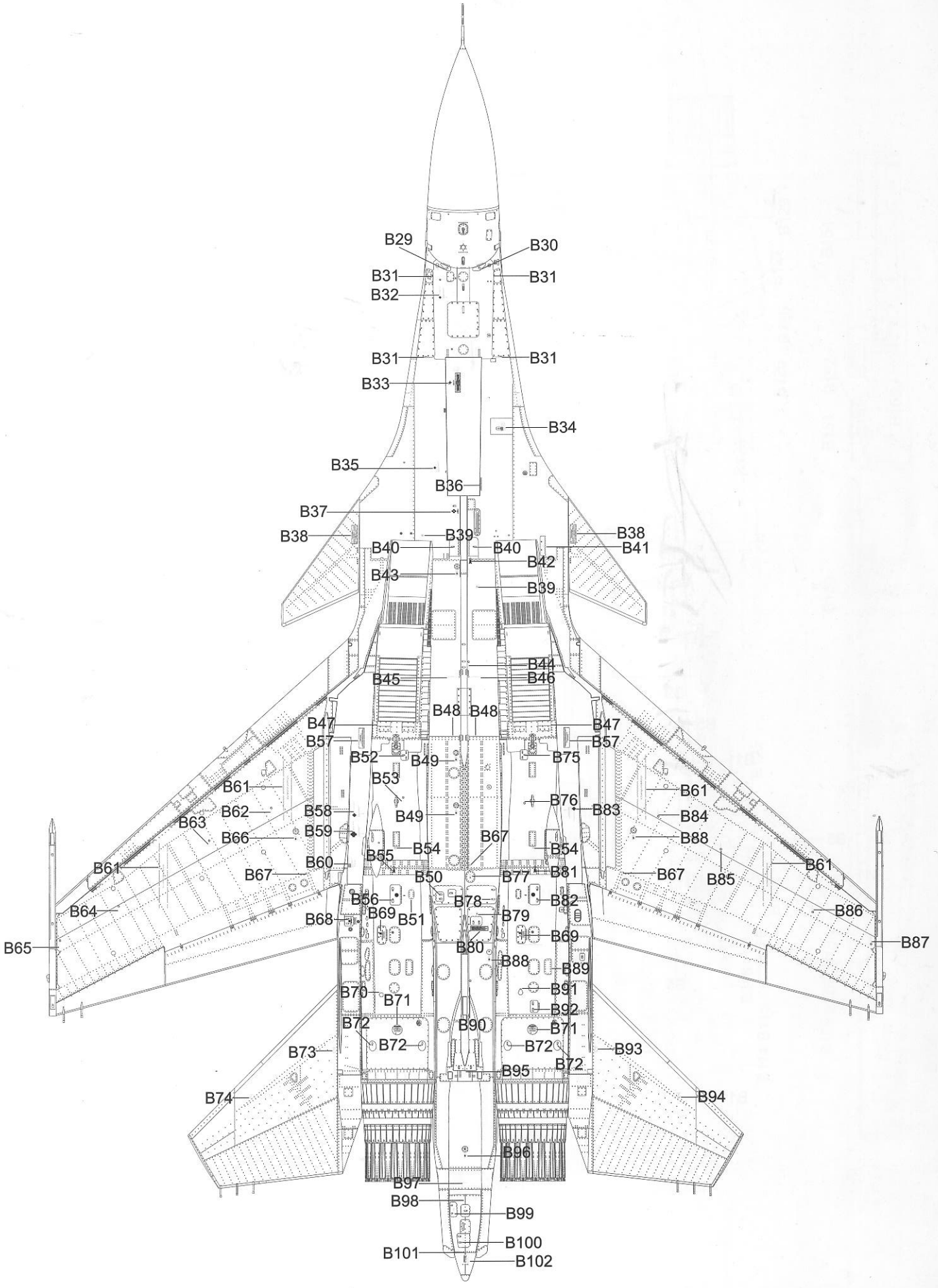
B29
B30
B31
B31
B32
B31
B31
B33
B34
B35
B36
B37
B38
B39
B38
B40
B40
B41
B42
B43
B39
B44
B45
B46
B48
B48
B47
B47
B57
B57
B52
B49
B75
B53
B61
B61
B76
B62
B58
B83
B84
B63
B49
B59
B66
B67
B88
B54
B54
B55
B61
B60
B61
B67
B50
B77
B81
B67
B85
B56
B78
B82
B64
B86
B68
B69
B51
B79
B69
B65
B87
B80
B88
B89
B70
B91
B71
B92
B72
B90
B71
B72
B72
B73
B93
B72
B95
B74
B94
B96
B97
B98
B99
B100
B101
B102